SHARP PARTS GUIDE

CODE:00ZARC260/P2/

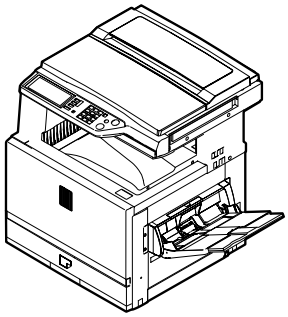

AR-C260
AR-C260M

Digital Full Color Copier / Printer
Digital Full Color Multifunctional System

Model AR-C260 AR-C260M

CONTENTS

1 (Exteriors 1)
2 (Exteriors 2)
3 (Document detect unit)
4 (Operation panel section)
5 (Original cover unit) [AR-C260S/AR-C260, AR-C260M(Except U.S.A,Europe,Australia,New Zealand)]
6 1 (Scanner unit 1)
7 2 (Scanner unit 2)
8 (Lamp unit)
9 (Scanner joint unit)
10 (Casette unit)
11 (Paper feed unit)
12 (Paper feeding drive unit)
13 1 (Multi manual paper feeding unit 1)
14 2 (Multi manual paper feeding unit 2)
15 3 (Multi manual paper feeding unit 3)
16 (Vertical transport guide unit)
17 (Cassette guide R / Vertical transport lower unit)
18 (PS unit)
19 (Transfer belt unit 1)
20 (Transfer belt unit 2)
21 (Transfer lift-up unit)
22 (Process unit)
23 (Drum drive unit)
24 (Fusing unit 1)
25 (Fusing unit 2)
26 (Fusing drive unit)
27 (Left door)
28 (FD delivery unit)
29 (Frame 1)
30 (Frame 2)
31 (Frame 3)
32 (Transfer insert guide)
33 (Duct unit)
34 (Control box)
35 (Wiring section)
36 (Packing Material & Accessories)
37 FAX BOX unit [AR-C260F/C260FP]
38 (Printer controler section) [AR-C260M/C260FP]
39 (RADF Exteriors) [AR-C260F/C260FP]
40 1 (RADF Paper feedig section 1) [AR-C260F/C260FP]
41 2 (RADF Paper feedig section 2) [AR-C260F/C260FP]
42 (RADF Paper feedig drive section) [AR-C260F/C260FP]
43 1 (RADF Delivery section 1) [AR-C260F/C260FP]
44 2 (RADF Delivery section 2) [AR-C260F/C260FP]
45 (RADF Transport section) [AR-C260F/C260FP]
46 (RADF Transport drive section) [AR-C260F/C260FP]
47 (RADF Base plate unit) [AR-C260F/C260FP]
48 (RADF Wiring section) [AR-C260F/C260FP]
49 (Modem control PWB) [AR-C260F/AR-C260FP]
50 (TEL/LIU PWB) [AR-C260F/AR-C260FP]
51 (PCU PWB)
52 (MFPC2 PWB)
53 (ICU PWB)
54 (OPE KEY PWB)
55 (DRIVER PWB)
56 (LVDS/INV PWB)
57 (FAX AC power supply unit) [AR-C260F/C260FP]
58 (PRTC PWB) [AR-C260M/AR-C260FP]
■ (Index)

本書はサービス活動用に作成した資料です。一部内容が製品の改良・改善等により予告なしに変わることがあります。

SHARP CORPORATION

This document has been published to be used for after sales service only.
The contents are subject to change without notice.

補修部品のランク付

市場における補修部品の在庫管理が、適正に運営出来る手助けとなることを、目的とします。

Aランク ： メンテナンスパーツ、メンテナンスパーツには入っていないがメンテナンスパーツに近い消耗パーツ。
Bランク ： 性能・機能パーツ（センサー、クラッチ等の電気パーツ）、消耗パーツ。
Eランク ： 基板含むユニットパーツ。
Dランク ： 整備パーツ（外装、パッキング、同梱パーツ）。
Cランク ： 上記ランク以外のパーツ（基板の子部品を除いたもの）。

DEFINITION

Rank A ：Maintenance parts, and consumable parts which are not included in but closely related to maintenance parts
Rank B ：Performance/function parts (sensors, clutches, and other electrical parts), consumable parts
Rank E ：Unit parts including PWB
Rank D ：Preparation parts (External fitting, packing, parts packed together)
Rank C ：Parts other than the above (excluding sub components of PWB)

安全性・信頼性確保のため部品は、必ず正規のものをご使用下さい。
⚠ 印の商品は、安全上重要な部品です。交換をする時は、安全及び性能維持のため必ず指定の部品をご使用下さい。
Because parts marked with "⚠" is indispensable for the machine safety maintenance and operation, it must be replaced with the parts specific to the product specification.

○ 当モデルのサービス資料には、この資料以外にサービスマニュアル（回路図含む）があります。合わせてご利用下さい。
○ Other than this Parts Guide, please refer to documents Service Manual(including Circuit Diagram)of this model.
○ Please use the 13 digit code described in the right hand corner of front cover of the document, when you place an order.
○ For U.S. only-Use order codes provided in advertising literature. Do not order from parts department.

＊ These parts are supplied by SMF

---

1 外装 1(Exteriors 1)

NO.	PARTS CODE	PRICE RANK Ex.	PRICE RANK Ja.	NEW MARK	PART RANK	DESCRIPTION		
1	GCAB-1018FCZ5	BF	FG	N	D	Delivery tray cabinet right	(100V Series)	排紙ﾄﾚｲｷｬﾋﾞ右
	GCAB-1018FCZZ	AY	FQ	N	D	Delivery tray cabinet right	(200V Series)	排紙ﾄﾚｲｷｬﾋﾞ右
2	XJBSE40P12000	AA	DD	N	C	Screw(4×12)		ﾋﾞｽ
3	GCAB-0988FCZ5	BC	GJ	N	D	Delivery tray cabinet	(100V Series)	排紙ﾄﾚｲｷｬﾋﾞ
	GCAB-0988FCZZ	BE	GN	N	D	Delivery tray cabinet	(200V Series)	排紙ﾄﾚｲｷｬﾋﾞ
4	XEBSE40P08000	AA	DD		C	Screw(4×8)		ﾋﾞｽ
6	GCAB-0987FCZ5	AV	FG	N	D	Left cabinet rear	(100V Series)	左ｷｬﾋﾞ後
	GCAB-0987FCZZ	AU	EZ	N	D	Left cabinet rear	(200V Series)	左ｷｬﾋﾞ後
7	PFTA-0141FCZ5	AK	DX	N	D	Left cabinet rear cover	(100V Series)	左ｷｬﾋﾞ後蓋
	PFTA-0141FCZZ	AH	DX	N	D	Left cabinet rear cover	(200V Series)	左ｷｬﾋﾞ後蓋
8	GCAB-0993FCZZ	BA	FX	N	D	Rear cabinet		後ｷｬﾋﾞ
9	LPLTM6092FCZ1	AM	EG	N	C	CONT back fixing plate	(AR-C260/C260S/C260F)	CONT 背面ﾌﾟﾚｰﾄ
10	GCAB-0992FCZ5	AT	EZ	N	D	Right cabinet rear	(100V Series)	右ｷｬﾋﾞ後
	GCAB-0992FCZZ	AV	FG	N	D	Right cabinet rear	(200V Series)	右ｷｬﾋﾞ後
11	PFTA-0142FCZZ	AE	DS	N	D	Right cabinet rear cover		右ｷｬﾋﾞ後蓋
12	PCOVP1703FCZ5	AP	EQ	N	C	DC power supply CFM fixing cover	(100V Series)	DC 電源 CFM 取付けｶﾊﾞｰ
	PCOVP1703FCZZ	AP	EQ	N	C	DC power supply CFM fixing cover	(200V Series)	DC 電源 CFM 取付けｶﾊﾞｰ
13	GCAB-0991FCZ5	AS	EQ	N	D	Right cabinet upper	(100V Series)	右ｷｬﾋﾞ上
	GCAB-0991FCZZ	AR	EQ	N	D	Right cabinet upper	(200V Series)	右ｷｬﾋﾞ上
15	GCAB-0990FCZ5	AM	EG	N	D	Right cabinet lower	(100V Series)	右ｷｬﾋﾞ下
	GCAB-0990FCZZ	AP	EQ	N	D	Right cabinet lower	(200V Series)	右ｷｬﾋﾞ下
16	GCAB-0989FCZ5	AT	EZ	N	D	Right cabinet front	(100V Series)	右ｷｬﾋﾞ前
	GCAB-0989FCZZ	AR	EQ	N	D	Right cabinet front	(200V Series)	右ｷｬﾋﾞ前
17	PMAGT0015FCZZ	AD	DJ		C	Magnet catch(10P)		MG ｷｬｯﾁ
18	GCAB-0980FCZ5	BA	FX	N	D	Front frame cover		前ﾌﾚｰﾑｶﾊﾞｰ
19	GCAB-0985FCZ5	AP	EQ	N	D	Front cabinet lower	(100V Series)	前ｷｬﾋﾞ下
	GCAB-0985FCZZ	AQ	EQ	N	D	Front cabinet lower	(200V Series)	前ｷｬﾋﾞ下
20	CBDGD0043FC04	AR	EQ	N	C	Front cabinet badge	[AR-C260S]	前ｷｬﾋﾞﾊﾞｯｼﾞ
	CBDGD0043FC05	AQ	EQ	N	C	Front cabinet badge	[AR-C260F]	前ｷｬﾋﾞﾊﾞｯｼﾞ
	CBDGD0043FC03	AQ	EQ	N	C	Front cabinet badge	[AR-C260FP]	前ｷｬﾋﾞﾊﾞｯｼﾞ
	CBDGD0043FC02	AP	EQ	N	C	Front cabinet badge	[AR-C260M]	前ｷｬﾋﾞﾊﾞｯｼﾞ
	CBDGD0043FC01	AQ	EQ	N	C	Front cabinet badge	[AR-C260]	前ｷｬﾋﾞﾊﾞｯｼﾞ
21	GCAB-0984FCZ5	BM	HR	N	D	Front cabinet	(100V Series)	前ｷｬﾋﾞ
	GCAB-0984FCZZ	BA	FX	N	D	Front cabinet	(200V Series)	前ｷｬﾋﾞ
22	LPLTM5027FCZZ	AC	DJ		C	Magnet catch plate S		MG ｷｬｯﾁﾌﾟﾚｰﾄ S
23	LBNDZ0069FCZZ	AD	DJ		C	Band		ﾊﾞﾝﾄﾞ
24	XHBSE40P08000	AA	DD		C	Screw(4×8)		ﾋﾞｽ
25	XEBSE30P08000	AA	DD		C	Screw(3×8)		ﾋﾞｽ
26	LPiN-0277FCZZ	AB	DJ		C	Slide pin		ｽﾗｲﾄﾞﾋﾟﾝ
27	NFANP0070FCZZ	AZ	FX	N	B	PS cooling fan		電源冷却ﾌｧﾝ
28	XEBSD40P30000	AA	DD		C	Screw(4×30)		ﾋﾞｽ
29	NFANP0071FCZZ	AZ	FX	N	B	Fan	(AR-C260/C260S/C260F)	ﾌｧﾝ
30	LHLDZ1547FCZZ	AD	DJ	N	C	Fan holder	(AR-C260/C260S/C260F)	ﾌｧﾝﾎﾙﾀﾞｰ
31	XHBSE30P06000	AA	DD		C	Screw(3×6)	(AR-C260/C260S/C260F)	ﾋﾞｽ
32	LX-BZ0901FCZZ	AC	DD		C	Screw	(AR-C260/C260S/C260F)	ﾋﾞｽ
33	TLABZ4742FCZZ	AL	EB	N	C	Color mark label		ｶﾗｰﾏｰｸﾗﾍﾞﾙ

1 外装 1(Exteriors 1)

NO.	PARTS CODE	PRICE RANK Ex.	PRICE RANK Ja.	NEW MARK	PART RANK	DESCRIPTION	
34	PCOVP1618FCZ1	AH	DX	N	D	ROM cover	ROM ｶﾊﾞｰ
35	XHBSE30P08000	AA	DD		C	Screw(3×8)	ﾋﾞｽ
36	PCOVP1623FCZ1	AH	DX	N	D	FAX connector cover [Except AR-C260F/C260FP]	FAX ｺﾈｸﾀｶﾊﾞｰ
37	PMLT-1316FCZZ	AC	DJ	N	C	Sub ozone filter cushion	ｻﾌﾞｵｿﾞﾝﾌｨﾙﾀｰﾓﾙﾄ
38	PFiLZ0296FCZZ	AQ	EQ	N	A	Sub ozone filter	ｻﾌﾞｵｿﾞﾝﾌｨﾙﾀｰ
39	PCOVP1706FCZ5	AE	DJ	N	C	Sub ozone filter cover (100V Series)	ｻﾌﾞｵｿﾞﾝﾌｨﾙﾀｰｶﾊﾞｰ
	PCOVP1706FCZZ	AE	DS	N	C	Sub ozone filter cover (200V Series)	ｻﾌﾞｵｿﾞﾝﾌｨﾙﾀｰｶﾊﾞｰ
40	LX-NZ0088FCZZ	AC	DD		C	Nut	ﾅｯﾄ
41	TLABZ4047FCZZ	AC	DJ		C	Enagy star label (Japan,U.Kingdom, Australia,New Zealand,Germany)	ｴﾅｼﾞｰｽﾀｰﾗﾍﾞﾙ
42	TCAUA0770FCZZ	AB	DD		C	Service cautions label (Except Japan)	ｻｰﾋﾞｽ注意ﾗﾍﾞﾙ
43	TLABF2705FCZZ	AB	DD		C	FCC conformity label A,B (U.S.A,Canada)	FCC 適合ﾗﾍﾞﾙ A,B
45	TLABH4186FCZZ	AE	DS		C	Class A VCCI label (Japan only)	ｸﾗｽ A VCCI ﾗﾍﾞﾙ
47	TLABS4306FCZZ	AC	DJ		C	Noise label class A (U.S.A,Canada)	ﾉｲｽﾞﾗﾍﾞﾙｸﾗｽ A
48	TLABZ4694FCZZ	AF	DS		C	Imagery label (U.S.A only)	ｲﾒｰｼﾞｬｰﾗﾍﾞﾙ
49	TLABZ4720FCZZ	AC	DJ		C	Heater SW label (Japan only)	ﾋｰﾀｰｽｲｯﾁﾗﾍﾞﾙ
50	TLABZ0059QSZZ	AE	DJ		C	ECP label (Canada only)	ECP ﾗﾍﾞﾙ

1 外装 1(Exteriors 1)

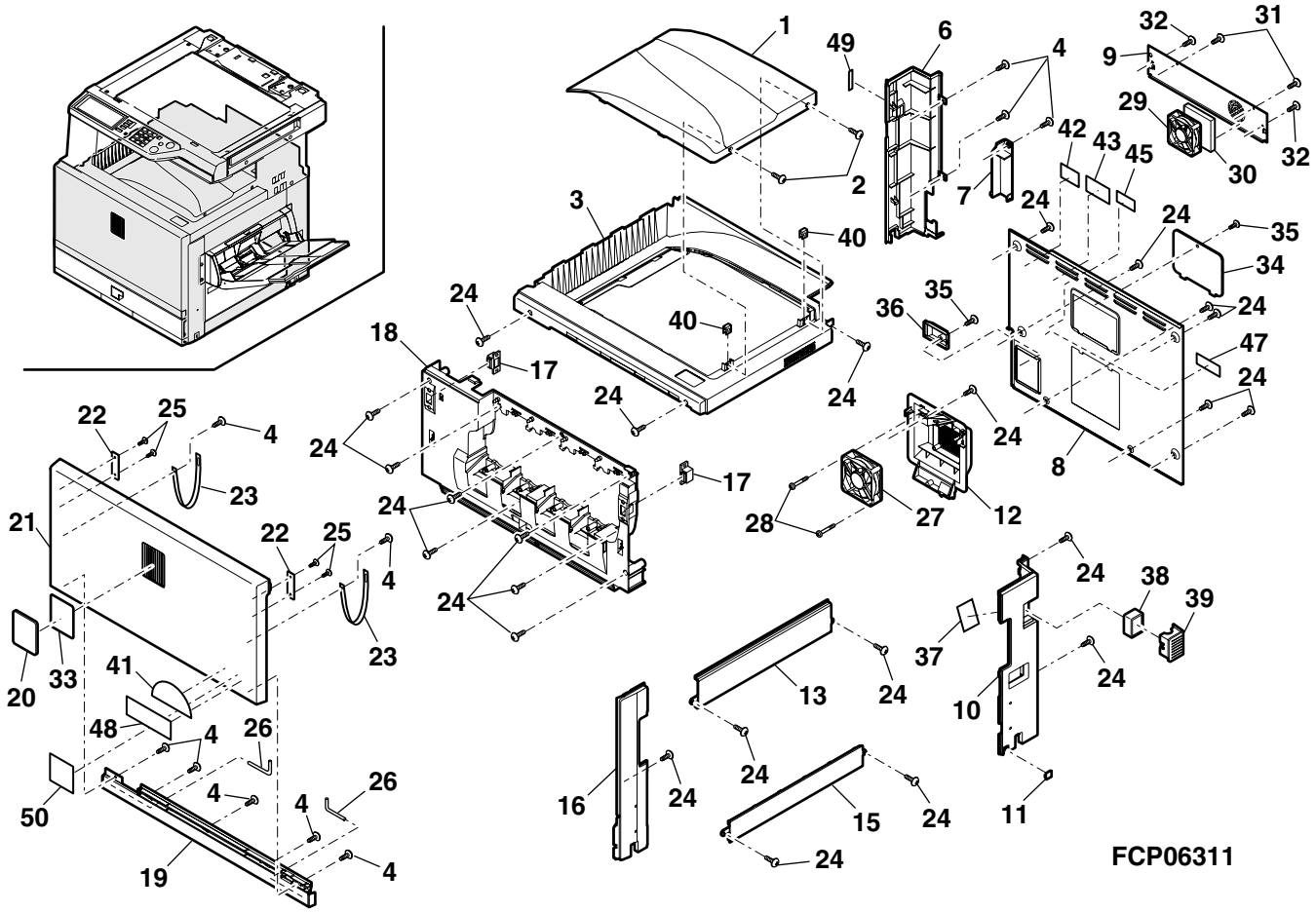

2 外装 2(Exteriors 2)

NO.	PARTS CODE	PRICE RANK Ex.	PRICE RANK Ja.	NEW MARK	PART RANK	DESCRIPTION
1	GCAB-0995FCZ5	AQ	EQ	N	D	Upper cabinet left (100V Series) 上ｷｬﾋﾞ左
	GCAB-0995FCZZ	AR	EQ	N	D	Upper cabinet left (200V Series) 上ｷｬﾋﾞ左
2	CFiX-0571FC01	AY	FQ	N	D	Glass fixing left (Japan only) ｶﾞﾗｽ押え左
	CFiX-0571FC02	AN	EQ	N	D	Glass fixing left (Except Japan)[AB Series] ｶﾞﾗｽ押え左
	CFiX-0571FC03	AN	EQ	N	D	Glass fixing left (Except Japan)[Inch Series] ｶﾞﾗｽ押え左
3	GCAB-0998FCZ5	AP	EQ	N	D	Upper cabinet rear left (100V Series) 上ｷｬﾋﾞ後左
	GCAB-0998FCZZ	AG	DX	N	D	Upper cabinet rear left (200V Series) 上ｷｬﾋﾞ後左
4	LFiX-0572FCZ5	AS	EQ	N	D	Glass fixing right (100V Series) ｶﾞﾗｽ押え右
	LFiX-0572FCZZ	AK	DX	N	D	Glass fixing right (200V Series) ｶﾞﾗｽ押え右
5	GCAB-0994FCZ5	BA	FX	N	D	Upper cabinet right (100V Series) 上ｷｬﾋﾞ右
	GCAB-0994FCZZ	AR	EQ	N	D	Upper cabinet right (200V Series) 上ｷｬﾋﾞ右
6	GCAB-0996FCZ5	AW	FG	N	D	Upper cabinet rear upper (100V Series) 上ｷｬﾋﾞ後上
	GCAB-0996FCZZ	AW	FG	N	D	Upper cabinet rear upper (200V Series) 上ｷｬﾋﾞ後上
7	GCAB-0997FCZ5	AP	EQ	N	D	Upper cabinet rear lower (100V Series) 上ｷｬﾋﾞ後下
	GCAB-0997FCZZ	AQ	EQ	N	D	Upper cabinet rear lower (200V Series) 上ｷｬﾋﾞ後下
8	PFTA-0134FCZ1	AE	DS	N	C	Connector cover W ｺﾈｸﾀｰ蓋 W
9	GCAB-0999FCZ5	AG	DX	N	D	Upper cabinet rear right (100V Series) 上ｷｬﾋﾞ後右
	GCAB-0999FCZZ	AH	DX	N	D	Upper cabinet rear right (200V Series) 上ｷｬﾋﾞ後右
10	PCOVP1646FCZZ	AG	DX	N	D	Ozone filter cover ｵｿﾞﾝﾌｨﾙﾀｰｶﾊﾞｰ
11	GCAB-1023FCZ5	BC	EQ	N	D	Rear joint cabinet (100V Series) 後連結ｷｬﾋﾞ
	GCAB-1023FCZZ	AT	EZ	N	D	Rear joint cabinet (200V Series) 後連結ｷｬﾋﾞ
12	PGLSP0003QSZZ	BA	FX		D	Table glass ﾃｰﾌﾞﾙｶﾞﾗｽ
13	CGLSP0104DS51	AT	EZ	N	E	Shading glass unit ｼｪﾃﾞｨﾝｸﾞｶﾞﾗｽﾕﾆｯﾄ
15	GCAB-1019FCZ5	AV	FQ	N	D	Upper cabinet center (100V Series) 後ｷｬﾋﾞ中
	GCAB-1019FCZZ	AU	EZ	N	D	Upper cabinet center (200V Series) 後ｷｬﾋﾞ中
16	GCAB-1022FCZ5	AQ	EZ	N	D	Right joint cabinet B (100V Series) 右連結ｷｬﾋﾞ B
	GCAB-1022FCZZ	AU	EZ	N	D	Right joint cabinet B (200V Series) 右連結ｷｬﾋﾞ B
17	GCAB-1020FCZ5	AL	DX	N	D	Rear cabinet center (100V Series) 右ｷｬﾋﾞ中
	GCAB-1020FCZZ	AH	DX	N	D	Rear cabinet center (200V Series) 右ｷｬﾋﾞ中
18	GCAB-1025FCZ5	AZ	EQ	N	D	Front cabinet upper (100V Series) 前ｷｬﾋﾞ上
	GCAB-1025FCZZ	AR	EQ	N	D	Front cabinet upper (200V Series) 前ｷｬﾋﾞ上
19	GCAB-0982FCZ5	AU	FG	N	D	FD delivery enter cabinet (100V Series) FD 排紙口ｷｬﾋﾞ
	GCAB-0982FCZZ	AS	EQ	N	D	FD delivery enter cabinet (200V Series) FD 排紙口ｷｬﾋﾞ
20	GCAB-1024FCZ5	AU	FQ	N	D	FD joint cabinet (100V Series) FD 連結ｷｬﾋﾞ
	GCAB-1024FCZZ	AX	FG	N	D	FD joint cabinet (200V Series) FD 連結ｷｬﾋﾞ
21	PFTA-0144FCZZ	AE	DJ	N	D	Card reader cover ｶｰﾄﾞﾘｰﾀﾞｰ蓋
22	XHBSE30P08000	AA	DD		C	Screw(3×8) ﾋﾞｽ
23	XHBSE40P08000	AA	DD		C	Screw(4×8) ﾋﾞｽ
24	XBTSE40P06000	AA	DD		C	Screw(4×6) ﾋﾞｽ
25	XEBSE40P08000	AA	DD		C	Screw(4×8) ﾋﾞｽ
26	TLABH4748FCZZ	AF	DS	N	C	Copy prohibition caution label (Japan only) ｺﾋﾟｰ禁止注意ﾗﾍﾞﾙ
	TLABH4749FCZZ	AE	DJ	N	C	Copy prohibition caution label (Canada only) ｺﾋﾟｰ禁止注意ﾗﾍﾞﾙ
27	XEBSD40P10000	AA	DD		C	Screw(4×10) ﾋﾞｽ
30	PCOVP0911FCZ2	AD	DJ	N	D	Upper exterior rear cover R 上ｷｬﾋﾞ後ｶﾊﾞｰ R (AR-C260F/C260FP/C260,C260M[U.S.A,CANADA,Australia,Europe])
31	PCOVP0941FCZ2	AD	DJ	N	D	Upper exterior rear cover L 上ｷｬﾋﾞ後ｶﾊﾞｰ L (AR-C260F/C260FP/C260,C260M[U.S.A,CANADA,Australia,Europe])
32	LX-BZ0776FCZZ	AG	DS		C	Screw (AR-C260F/C260FP) ﾀﾞﾝﾈｼﾞ R

3 原稿検知ﾕﾆｯﾄ (Document detect unit)

NO.	PARTS CODE	PRICE RANK Ex.	PRICE RANK Ja.	NEW MARK	PART RANK	DESCRIPTION
1	NSFTZ1805FCZZ	AE	DS		C	Original detection fulcrum shaft 原稿検知支点ｼｬﾌﾄ
2	XRESP30-06000	AA	DD		C	E type ring E-ﾘﾝｸﾞ
3	MSPRT1563FCZZ	AC	DD		C	Original detect spring 原稿検知ｽﾌﾟﾘﾝｸﾞ
4	XBPSD30P06KS0	AA	DD		C	Screw(3×6KS) ﾋﾞｽ
5	MARMP0148FCZ2	AK	DX		C	Original detector arm lower T 原稿検知ｱｰﾑ下 T
6	PSLDH0178FCZZ	AD	DJ		C	Original detect shield plate 原稿検知遮光板
7	CPWBF1453FCE1	AX	FG		E	ORS emission PWB 原稿検知発光基板
8	LHLDZ1085FCZ2	AD	DJ		C	Holder ﾎﾙﾀﾞｰ
9	LBSHZ1102CCZZ	AC	DD		C	Rubber roller bushing 1 ｺﾞﾑﾛｰﾗｰ 1 ﾌﾞｯｼﾝｸﾞ
10	MARMP0147FCZ2	AK	DX		C	Original detector arm upper T 原稿検知ｱｰﾑ上 T
11	XEPSD30P05000	AA	DD		C	Screw(3×5) ﾋﾞｽ
12	GCAB-0996FCZ5	AW	FG	N	D	Upper cabinet rear upper (100V Series) 上ｷｬﾋﾞ後上
	GCAB-0996FCZZ	AW	FG	N	D	Upper cabinet rear upper (200V Series) 上ｷｬﾋﾞ後上
13	XEBSD30P08000	AA	DD		C	Screw(3×8) ﾋﾞｽ
14	CARMP0147DS51	BA	FX		E	Original detector luminescence unit 原稿検知発光ﾕﾆｯﾄ

2 外装 2(Exteriors 2)

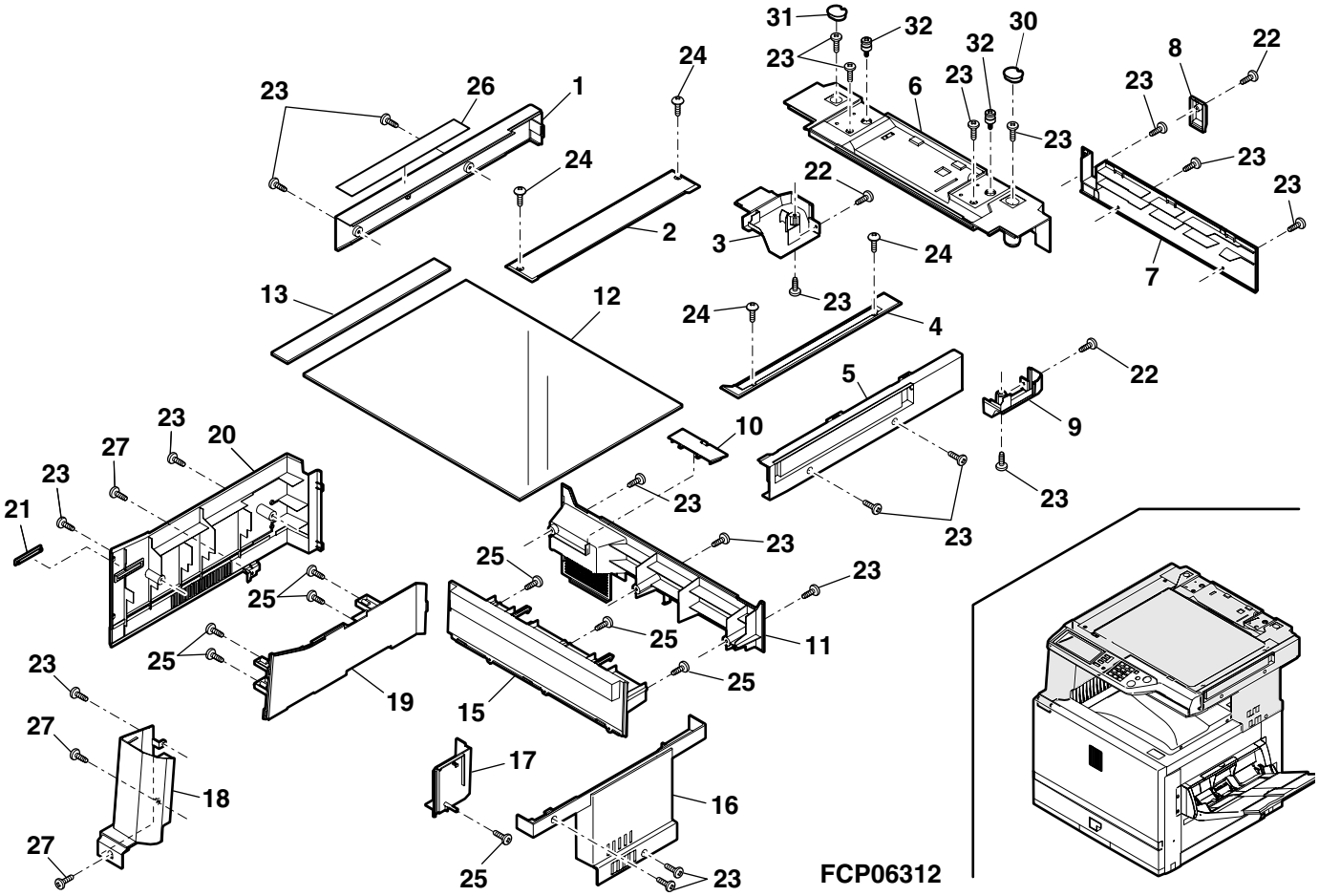

3 原稿検知ﾕﾆｯﾄ (Document detect unit)

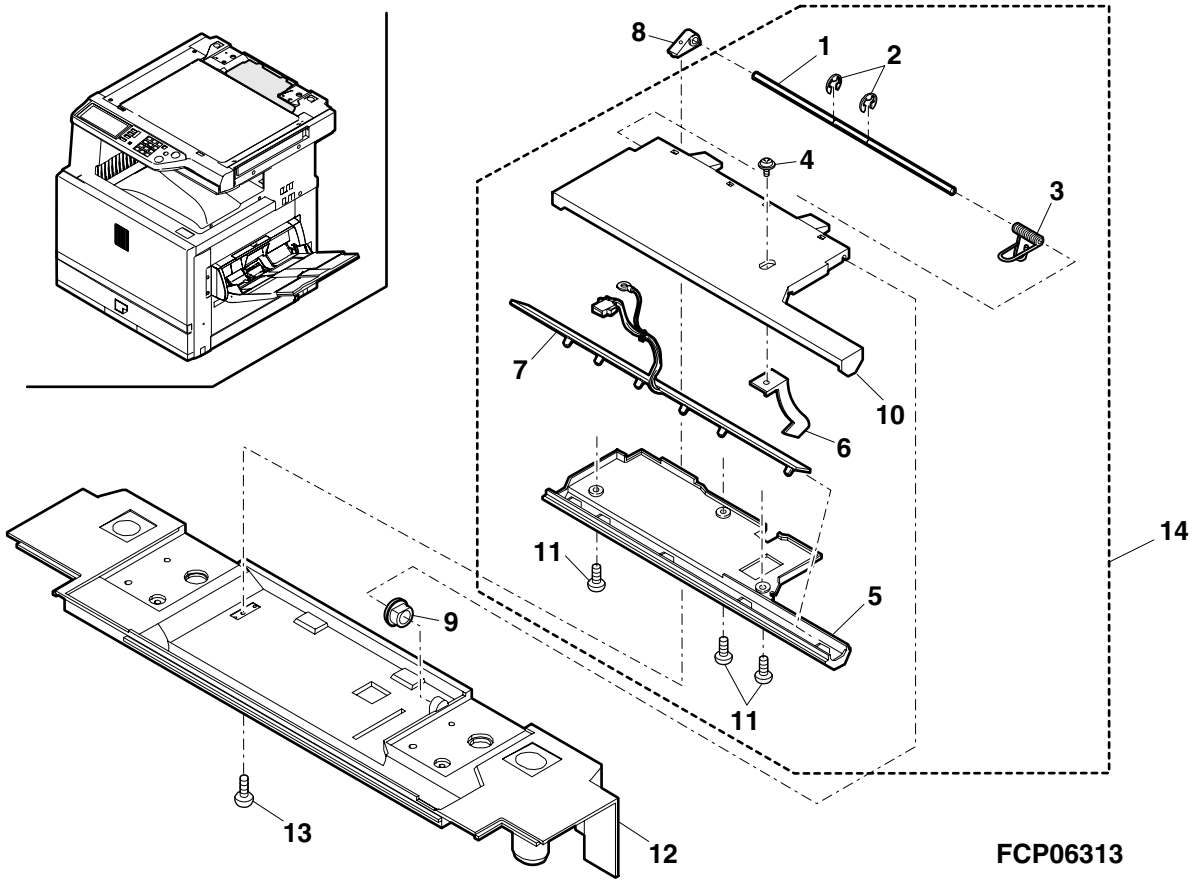

4 操作部 (Operation panel section)

NO.	PARTS CODE	PRICE RANK Ex.	PRICE RANK Ja.	NEW MARK	PART RANK	DESCRIPTION	
1	LDAiU0646FCZ5	BF	GN	N	C	Operation base (100V Series)	操作台板
	LDAiU0646FCZZ	AX	FG	N	C	Operation base (200V Series)	操作台板
2	XEBSE40P08000	AA	DD		C	Screw(4×8)	ﾋﾞｽ
3	CPWBF1525FCE1	BD	GJ	N	E	Operation key PWB	操作ｷｰ基板
4	XEPSD30P08000	AA	DD		C	Screw(3×8)	ﾋﾞｽ
5	CPWBN1560FCE1	BM	HR	N	E	LVDS/INV PWB	LVDS/INV 基板
6	LHLDZ1459FCZZ	AE	DS		C	LCD holder B	LCD ﾎﾙﾀﾞｰB
7	VVLLM065HB1-1	CB	TX		B	LCD(LLM065HB1)	LCD
8	QCNW-0214FCZZ	AD	DJ	N	C	OP-LCD FFC	OP-LCD FFC
9	LHLDZ1458FCZZ	AF	DS		C	LCD holder A	LCD ﾎﾙﾀﾞｰA
10	HPNLH0249FCZZ	BF	GN		C	Touch panel N	ﾀｯﾁﾊﾟﾈﾙ N
11	CBTN-0253FC01	AN	EG		D	Change key	切り替えｷｰ
12	CBTN-0252FC01	AP	EQ		D	Ten key	ﾃﾝｷｰ
13	HPNLC0247FCZ5	BD	GN	N	C	Operation panel A (100V Series)	操作ﾊﾟﾈﾙ A
	HPNLC0247FCZZ	AV	FG	N	C	Operation panel A (200V Series)	操作ﾊﾟﾈﾙ A
14	LPLTM2573FCZ1	AD	DJ		C	MG Plate	MG ﾌﾟﾚｰﾄ
15	XHSSE30P10000	AA	DD		C	Screw(3×10)	ﾋﾞｽ
16	CPNLC0248FC01	AU	FG	N	D	Operation panel B (AR-C260S/C260M[JAPAN])	操作ﾊﾟﾈﾙ B
	CPNLC0248FC03	AU	GN	N	D	Operation panel B (AR-C260F/C260FP)	操作ﾊﾟﾈﾙ B
	CPNLC0248FC02	AV	FG	N	D	Operation panel B (AR-C260/C260M[Except JAPAN])	操作ﾊﾟﾈﾙ B
17	LPiNS0014QSCZ	AF	DS	N	C	Pin	ﾋﾟﾝ
18	LPiNS0014QSBZ	AF	DS	N	C	Pin	ﾋﾟﾝ
19	PSHEZ5065FCZZ	AQ	EQ	N	C	Copy key sheet W	ｺﾋﾟｰｷｰ用ｼｰﾄ W
20	CBTN-0260FC01	AE	DX	N	D	C key	C ｷｰ
21	CBTN-0261FC01	AK	DJ	N	D	CA key	CA ｷｰ
22	PFiLW0294FCZZ	AE	DS	N	C	Copy key filter	ｺﾋﾟｰｷｰｽﾓｰｸ
23	CBTN-0256FC02	AR	EQ	N	D	Color copy key	ｶﾗｰｺﾋﾟｰｷｰ
24	CBTN-0256FC03	AN	EG	N	D	Monochrome copy key	白黒ｺﾋﾟｰｷｰ
25	PSHEZ4906FCZZ	AC	DJ		C	Touch panel sheet	ﾀｯﾁﾊﾟﾈﾙｼｰﾄ
26	MSPRP3009FCZZ	AD	DJ		C	LCD earth spring	LCD 用ｱｰｽ板ﾊﾞﾈ
27	DHAi-3193FC11	AC	DJ	N	C	Panel earth harness	ﾊﾟﾈﾙｱｰｽﾊｰﾈｽ
28	PSHEP5006FCZZ	AE	DS	N	C	Panel sheet	ﾊﾟﾈﾙﾖｳｼｰﾄ
29	DHAi-3419FCZZ	AE	DS	N	C	OP-PD harness	OP-PD ﾊｰﾈｽ

4 操作部 (Operation panel section)

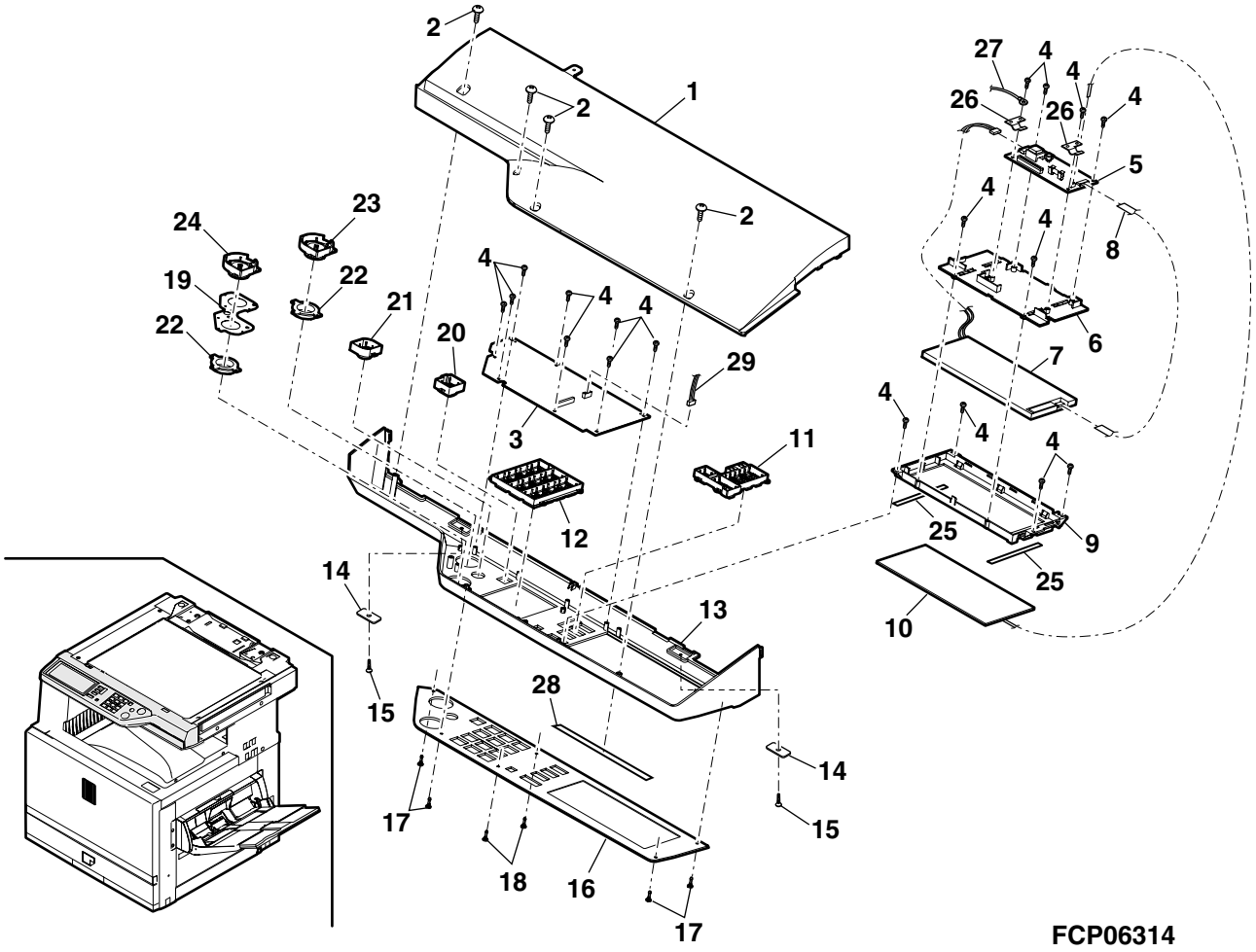

5 ｵﾘｼﾞﾅﾙｶﾊﾞｰﾕﾆｯﾄ (Original cover unit)
[AR-C260S/AR-C260,AR-C260M(Except U.S.A,Europe,Australia,New Zealand)]

NO.	PARTS CODE	PRICE RANK Ex.	PRICE RANK Ja.	NEW MARK	PART RANK	DESCRIPTION	
1	PSHEZ5059FCZZ	AU	EZ		D	OC sheet	OC ﾏｯﾄ
2	XJBSD40P12000	AA	DD		C	Screw(4×12)	ﾋﾞｽ
3	MHNG-0210FCZZ	AQ	EZ		C	OC hinge L	OC ﾋﾝｼﾞ L
4	MHNG-0211FCZZ	AQ	EZ		C	OC hinge R	OC ﾋﾝｼﾞ R
5	GCOVH0212FCZ2	BB	GD	N	D	Original cover R	ｵﾘｼﾞﾅﾙｶﾊﾞｰ R
6	PSTK-0015FCZ2	AU	EZ	N	C	OR stocker	OR ｽﾄｯｶｰ
8	MHNG-0170FCZ1	AE	DS		C	OC cover hinge	OC ｶﾊﾞｰﾋﾝｼﾞ
9	LPiNS0280FCZZ	AD	DJ		C	OC cover hinge pin	OC ｶﾊﾞｰﾋﾝｼﾞﾋﾟﾝ
10	XJBSD40P08000	AA	DD		C	Screw(4×8)	ﾋﾞｽ
11	GCOVH0211FCZ2	BB	GD	N	D	Original cover F	ｵﾘｼﾞﾅﾙｶﾊﾞｰ F
	(Unit)						
901	CCOVH0212FC34	BN	HV	N	D	OC unit	OC ﾕﾆｯﾄ

5 ｵﾘｼﾞﾅﾙｶﾊﾞｰﾕﾆｯﾄ (Original cover unit)
[AR-C260S/AR-C260,AR-C260M(Except U.S.A,Europe,Australia,New Zealand)]

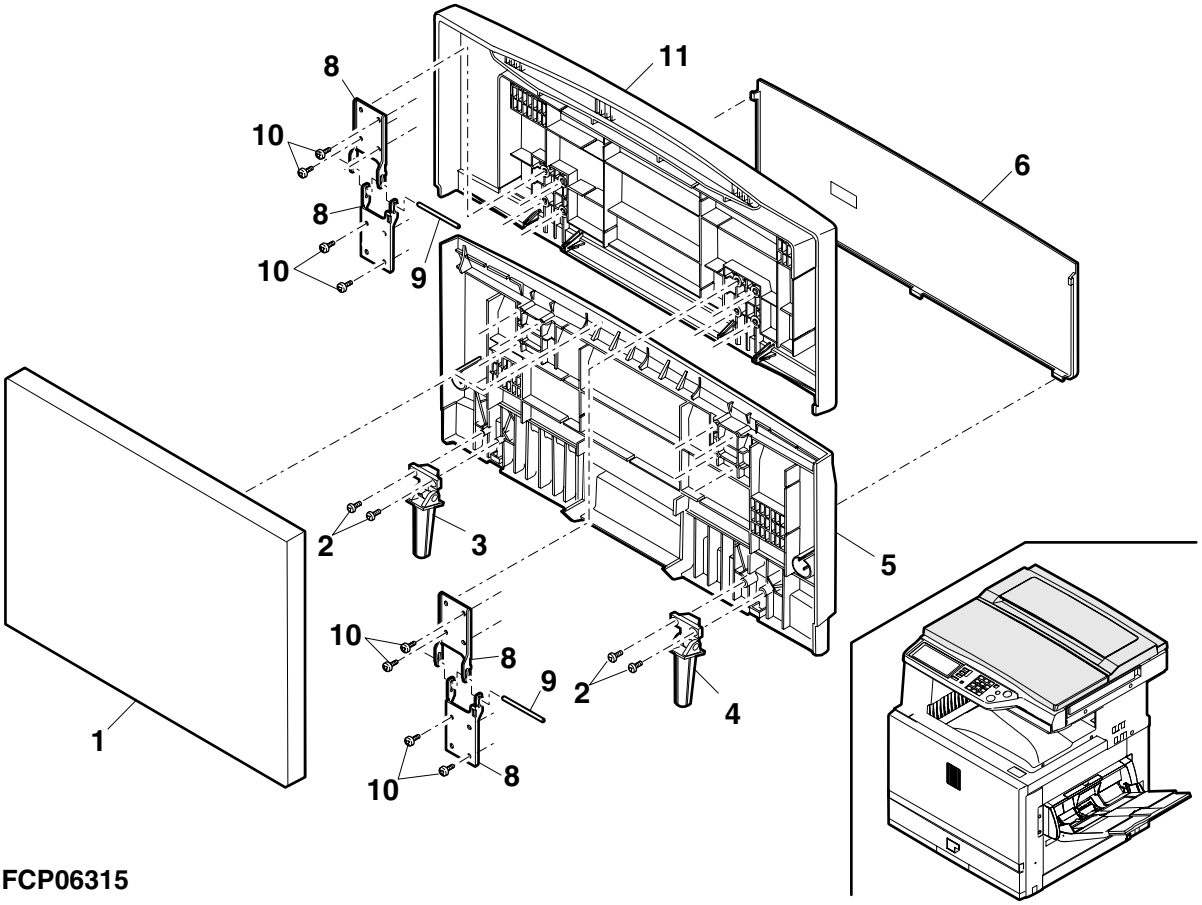

FCP06315

6 ｽｷｬﾅｰﾕﾆｯﾄ 1(Scanner unit 1)

NO.	PARTS CODE	PRICE RANK Ex.	PRICE RANK Ja.	NEW MARK	PART RANK	DESCRIPTION	
1	CPLTM5995DS51	CA	TV	N	E	Lens W unit	ﾚﾝｽﾞ W ﾕﾆｯﾄ
2	XHBSD30P08KS0	AB	DD	N	C	Screw(3×8KS)	ﾋﾞｽ
3	DHAi−3369FCZZ	AN	EG	N	C	MFP sensor harness	MFP ｾﾝｻｰﾊｰﾈｽ
4	PCOVP1631FCZZ	AP	EQ	N	C	Dark box cover	暗箱ｶﾊﾞｰ
5	XHBSD30P04000	AA	DD		C	Screw(3×4)	ﾋﾞｽ
6	XHBSE30P08000	AA	DD		C	Screw(3×8) (Japan only)	ﾋﾞｽ
7	XHBSD30P06000	AA	DD		C	Screw(3×6) (Japan only)	ﾋﾞｽ
8	VHi28F161L01F	BA	FX	N	C	MFP FLASH ROM(28F161L01F)	MFP ﾌﾗｯｼｭﾛﾑ
9	LBSHC0355FCZZ	AF	DS	N	C	Bushing(LES-1017)	ﾌﾞｯｼﾝｸﾞ
10	VHi28F162L01F	BD	GN	N	C	OPE FLASH ROM(28F162L01F)	OPE ﾌﾗｯｼｭﾛﾑ
11	VHPGP3A38//−1	AH	DX		B	Photo sensor(GP3A38)	ﾌｫﾄｾﾝｻｰ
12	XBBSD40P14000	AA	DD		C	Screw(4×14)	ﾋﾞｽ
13	LPLTM5989FCZZ	AQ	EQ	N	C	OC fixing plate	OC 取付ﾌﾟﾚｰﾄ
15	VHPGP1A22LC−1	AK	EB		B	Photo sensor(GP1A22LC)	ﾌｫﾄｾﾝｻｰ
16	XBBSD40P10000	AA	DD		C	Screw(4×10)	ﾋﾞｽ
17	LPLTM6096FCZZ	AF	DS	N	C	Connector fixing plate	ｺﾈｸﾀ取付ﾌﾟﾚｰﾄ
18	PSHEP5075FCZZ	AF	DS	N	C	Harness protect film N	ﾊｰﾈｽ保護ﾌｨﾙﾑ N
19	LANGF1423FCZZ	AH	DX	N	C	Support angle R	補強ｱﾝｸﾞﾙ R
20	XHBSD30P06000	AA	DD		C	Screw(3×6)	ﾋﾞｽ
21	XHBSE40P08000	AA	DD		C	Screw(4×8)	ﾋﾞｽ
22	CPWBN1519DS52	CX	**	N	E	MFPC2 PWB	MFPC2 基板
23	LPLTM5991FCZZ	AW	FG	N	C	MPF support plate	MPF 支持ﾌﾟﾚｰﾄ
24	PCUSS0374FCZZ	AE	DS	N	C	Protection cushion	ﾎﾞｳｼﾝｸｯｼｮﾝ
25	CDAiU0618FC02	BN	HV	N	C	Optical base	光学台板
26	LRALM0201FCZZ	AN	EG	N	C	MFP rail	MFP ﾚｰﾙ
27	PSHEZ4843FCZ1	AC	DJ		C	Harnes fixing sheet 3	ﾊｰﾈｽ押えｼｰﾄ 3
28	PSHEP4932FCZ1	AC	DJ		C	Harness fixing sheet 4	ﾊｰﾈｽ押えｼｰﾄ 4
29	PMLT−1298FCZ1	AE	DS	N	C	FFC cushion	FFC ﾓﾙﾄ
30	PCOVP1632FCZZ	AM	EG	N	C	FCC cover	FFC ｶﾊﾞｰ
31	RHETP0099FCZZ	AV	EQ	N	C	Dry heater (Japan only)	除湿ﾋｰﾀｰ
33	LBNDJ0002FCZZ	AA	DD		C	Wire fixing band(HP-4N) (Japan only)	ﾊﾞﾝﾄﾞ
34	LHLDW5031BCZZ	AA	DD		C	Clamp (Japan only)	ｹｰﾌﾞﾙﾎﾙﾀﾞｰ
35	PSHEZ4836FCZZ	AB	DJ		C	Screw protect sheet	ﾋﾞｽ保護ｼｰﾄ
36	QCNW−0197FCZZ	AL	EB	N	C	MFP-OP FFC	MFP-OP FFC
37	QCNW−0213FCZZ	AH	DX	N	C	OP-KEY FFC	OP-KEY FFC
	(Unit)						
901	DUNT−7248DSZZ	CM	UW	N	E	Scaner unit(Include Block 7)	ｽｷｬﾅｰﾕﾆｯﾄ(ﾌﾞﾛｯｸ 7 含む)

6 ｽｷｬﾅｰﾕﾆｯﾄ 1(Scanner unit 1)

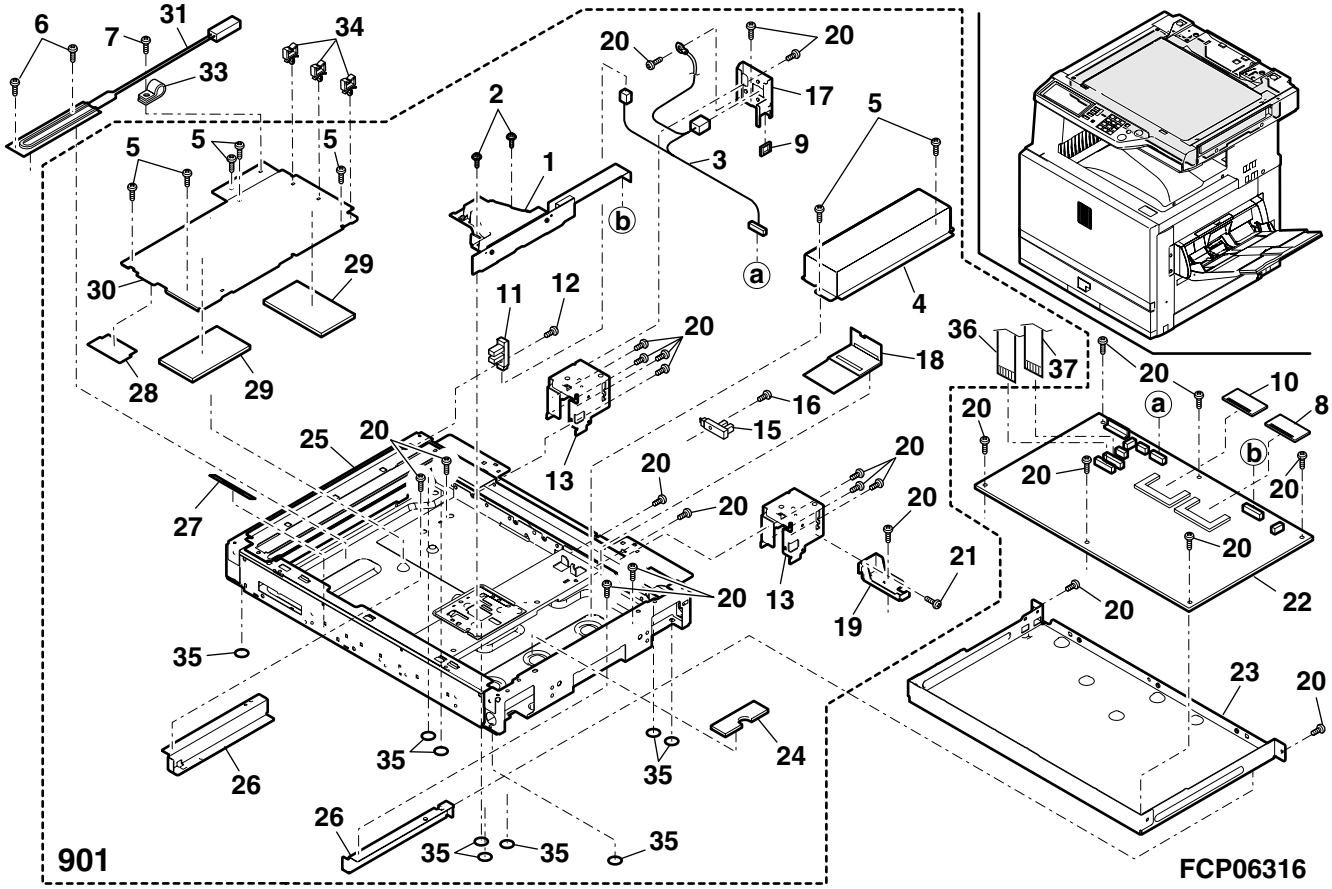

7 ｽｷｬﾅｰﾕﾆｯﾄ 2(Scanner unit 2)

NO.	PARTS CODE	PRICE RANK Ex.	PRICE RANK Ja.	NEW MARK	PART RANK	DESCRIPTION	
1	PWiR−0199FCZZ	AR	EQ	N	C	MB wire FW	MB ﾜｲﾔｰ FW
2	CHLDZ1446FC32	BH	HC	N	E	2nd.3rd mirror W unit	2.3 ﾐﾗｰ W ﾕﾆｯﾄ
3	XBBSD40P06000	AA	DD		C	Screw(4×6)	ﾋﾞｽ
4	LHLDZ1505FCZZ	AC	DJ		C	Wire holder	ﾜｲﾔｰﾎﾙﾀﾞｰ
5	PGiDM1890FCZZ	AC	DJ		C	CL guide	CL ｶﾞｲﾄﾞ
⚠ 6	CDAiU0619DS53	BR	LX	N	E	Lamp unit	ﾗﾝﾌﾟﾕﾆｯﾄ
7	PWiR−0200FCZZ	AR	EQ	N	C	MB wire RW	MB ﾜｲﾔｰ RW
9	LDAiU0610FCZZ	AE	DS		C	Harness fixing base	ﾊｰﾈｽ押えﾍﾞｰｽ
10	LFiX−0537FCZZ	AD	DJ		C	Harness fixing plate	ﾊｰﾈｽ押え
11	LBSHC0356FCZZ	AC	DJ	N	C	Bushing(T1.6)	ﾌﾞｯｼﾝｸﾞ
12	LX−BZ0324FCZZ	AA	DD		C	Screw	下ｸﾘｰﾅ用ﾋﾞｽ
13	NPLYZ0013QSZZ	AL	EB		C	Winding pulley PAN	巻取りﾌﾟｰﾘｰ PAN
14	XRESP70−08000	AA	DD		C	E type ring	E- ﾘﾝｸﾞ
15	LX−BZ0049FCZZ	AB	DD		C	Screw(M4×6W)	ﾑｼﾋﾞｽ
16	NSFTZ2694FCZZ	AP	EQ	N	C	Winder drive shaft	巻取り駆動軸
17	CSFTZ2694FC31	BA	FX	N	E	Winder drive shaft unit	巻取り駆動ｼｬﾌﾄﾕﾆｯﾄ
18	XHBSD30P06000	AA	DD		C	Screw(3×6)	ﾋﾞｽ
19	RMOTS0885FCZ1	BE	GN	N	B	Scanner motor	ｽｷｬﾅｰﾓｰﾀ
20	NBLTH0371FCZ1	AF	DS	N	B	Winder drive belt	巻取り駆動ﾍﾞﾙﾄ
21	MSPRT3098FCZZ	AC	DJ	N	C	Belt tension spring	ﾍﾞﾙﾄﾃﾝｼｮﾝｽﾌﾟﾘﾝｸﾞ
22	LPLTM5992FCZZ	AK	DX	N	C	Mirror motor fixing plate	ﾐﾗｰﾓｰﾀ取付けﾌﾟﾚｰﾄ
23	LBNDJ0043FCZ1	AA	DJ		C	Band(SG-130)	ﾊﾞﾝﾄﾞ
24	CDAiU0618FC02	BN	HV	N	C	Optical base	光学台板
25	PGUMS0283FCZ1	AA	DJ		C	Table glass rubber	ﾃｰﾌﾞﾙｶﾞﾗｽｺﾞﾑ
26	NBRGY0466FCZZ	AK	EB		C	Bearing(M8-M16)	ﾍﾞｱﾘﾝｸﾞ
28	XEPSD40P06000	AA	DD		C	Screw(4×6)	ﾋﾞｽ
29	CPWBF1454FCE1	BN	LE		E	ORS PD PWB	原稿検知受光基板
30	XHBSD40P06000	AA	DD		C	Screw(4×6)	ﾋﾞｽ
31	LHLDZ1381FCZZ	AL	EB		C	ORS PWB holder	受光基板ﾎﾙﾀﾞｰ
32	NPLYZ0005QSZZ	AG	DX		C	Pulley	定ﾌﾟｰﾘ
33	NPLYZ0006QSZZ	AD	DJ		C	L pulley	L ﾌﾟｰﾘ
34	XRESP40−05000	AA	DD		C	E type ring	E- ﾘﾝｸﾞ
35	LRALM0184FCZZ	AG	DX		C	MB-B rail R	MB-B ﾚｰﾙ R
36	LRALM0183FCZZ	AG	DX		C	MB-B rail F	MB-B ﾚｰﾙ F
37	LX−BZ0004QSZZ	AB	DD		C	Screw	ﾋﾞｽ
38	NPLYZ0401FCZZ	BB	GD	N	C	Pulley(50T)	ﾌﾟｰﾘ-
39	TLABZ4335FCZZ	AB	DJ		C	High voltage caution label	高圧注意ﾗﾍﾞﾙ
	(Unit)						
901	DUNT−7248DSZZ	CM	UW	N	E	Scaner unit(Include Block 6 Without No.39)	ｽｷｬﾅｰﾕﾆｯﾄ(ﾌﾞﾛｯｸ 6 含む。No.39 除く)

7 ｽｷｬﾅｰﾕﾆｯﾄ 2(Scanner unit 2)

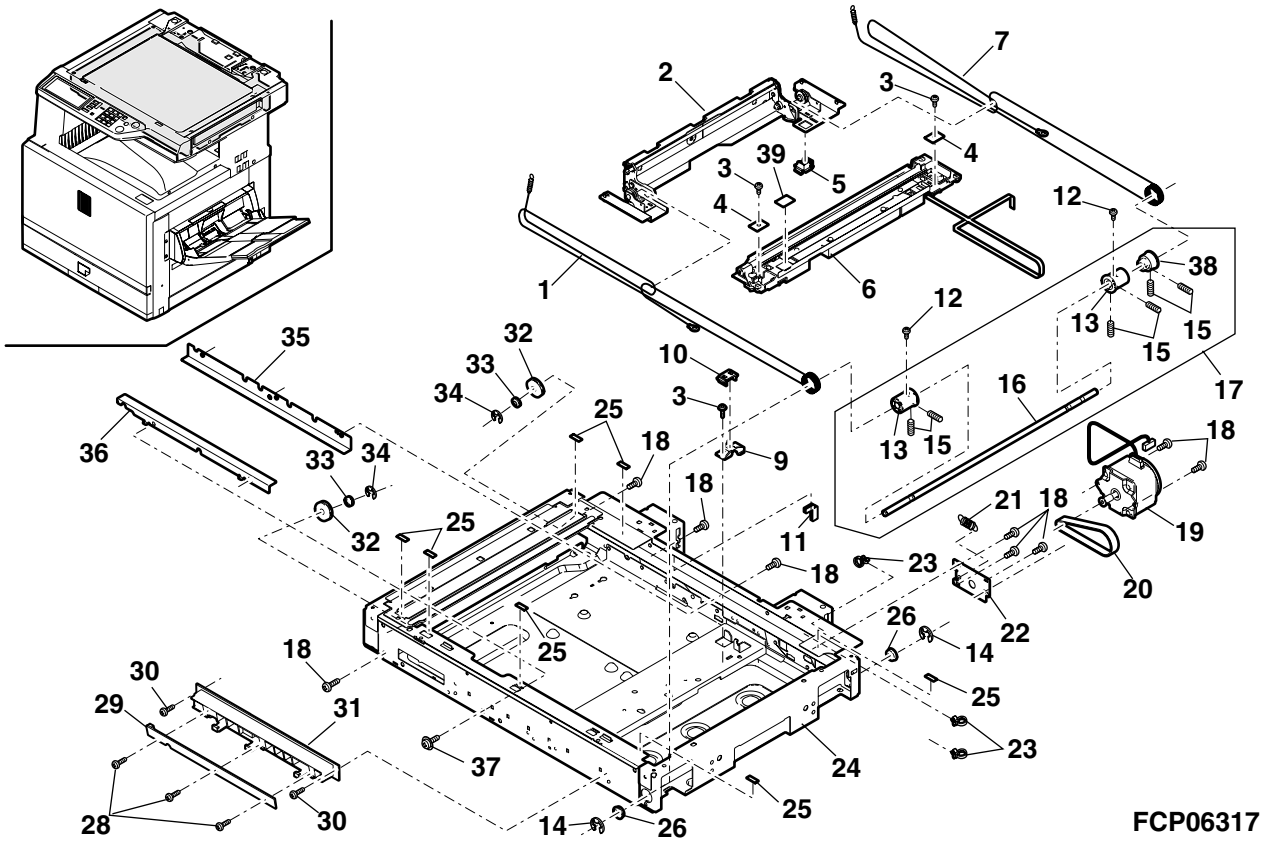

8 ﾗﾝﾌﾟﾕﾆｯﾄ (Lamp unit)

NO.	PARTS CODE	PRICE RANK Ex.	PRICE RANK Ja.	NEW MARK	PART RANK	DESCRIPTION	
⚠ 1	RLMPD0674FCZ1	BE	GN	N	B	Copy lanp W	ｷｾﾉﾝﾗﾝﾌﾟ W
2	XEBSD30P08000	AA	DD		C	Screw(3×8)	ﾋﾞｽ
3	PREFL0172FCZZ	AK	DX		C	Copy lamp reflector	ﾘﾌﾚｸﾀｰ
4	XBPSD30P12XS0	AA	DD	N	C	Screw(3×12XS)	ﾋﾞｽ
5	LDAiU0619FCZ1	AS	EQ		C	Lamp base	ﾗﾝﾌﾟﾍﾞｰｽ
6	PCUSU0203FCZZ	AE	DS		C	Protection cushion	ﾎﾞｳｼﾝｸｯｼｮﾝ
8	PSHEP5019FCZZ	AF	DS	N	C	Shading sheet	遮光ﾌｨﾙﾑ
9	PCUSF0334FCZZ	AP	EQ		C	Mirror cushion	ﾐﾗｰｸｯｼｮﾝ
10	MSLi−0138FCZZ	AC	DJ		C	Slider	ｽﾍﾟﾘ材
11	LSTYM0261FCZZ	AB	DJ		C	Wire support plate	ﾜｲﾔｰ支持板
12	MSPRP2825FCZZ	AC	DJ		C	Mirror spring	ﾐﾗｰｽﾌﾟﾘﾝｸﾞ
13	PMiR−0164FCZZ	AP	EQ		C	1st mirror	第一ﾐﾗｰ
14	CPWBF1523FC32	BF	GN	N	E	CL inverter PWB	CL ｲﾝﾊﾞｰﾀ基板
15	QCNW−0199FCZZ	AE	DJ	N	C	MFP-LAMP FFC	MFP-LAMP FFC
16	LFiX−0545FCZZ	AC	DJ		C	CL read harness fixing plate	CL ﾘｰﾄﾞﾊｰﾈｽ押え
	(Unit)						
⚠ 901	CDAiU0619DS53	BR	LX	N	E	Lamp unit	ﾗﾝﾌﾟﾕﾆｯﾄ

8 ﾗﾝﾌﾟﾕﾆｯﾄ (Lamp unit)

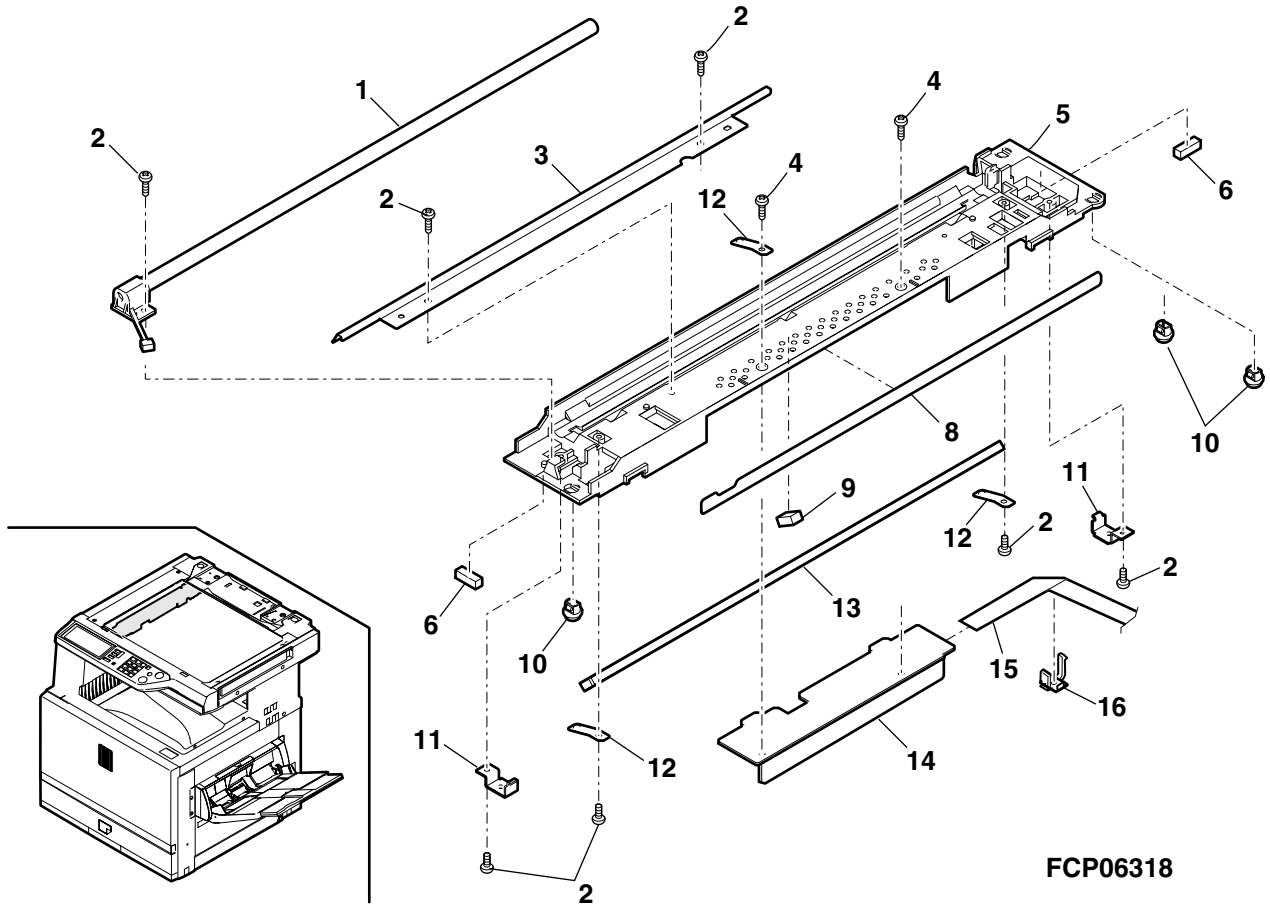

9 ｽｷｬﾅｰ連結ﾕﾆｯﾄ (Scanner joint unit)

NO.	PARTS CODE	PRICE RANK Ex.	PRICE RANK Ja.	NEW MARK	PART RANK	DESCRIPTION	
1	XHBSE40P08000	AA	DD		C	Screw(4×8)	ﾋﾞｽ
2	LPLTM6084FCZZ	AK	EB	N	C	Scaner joint plate Rear	ｽｷｬﾅ連結後ﾌﾟﾚｰﾄ
3	LPLTM6087FCZZ	AN	EG	N	C	Scaner joint plate IN	ｽｷｬﾅ連結ﾌﾟﾚｰﾄ IN
4	XHBSD30P08KS0	AB	DD	N	C	Screw(3×8KS)	ﾋﾞｽ
5	LPLTM6095FCZZ	AC	DJ	N	C	Scanner adjust plate	ｽｷｬﾅｰ調整ﾌﾟﾚｰﾄ
6	LX−BZ0880FCZZ	AB	DD		C	Screw	ﾋﾞｽ
7	LPLTM6083FCZZ	AV	FG	N	C	Scaner joint plate R	ｽｷｬﾅ連結右ﾌﾟﾚｰﾄ
9	LPLTM6085FCZZ	AN	EG	N	C	Scaner joint plate F	ｽｷｬﾅ連結前ﾌﾟﾚｰﾄ
10	LPLTM6082FCZZ	AT	EZ	N	C	Scaner joint plate L	ｽｷｬﾅ連結左ﾌﾟﾚｰﾄ
12	LPLTM6086FCZZ	AK	DX	N	C	Scaner joint plate V	ｽｷｬﾅ連結縦ﾌﾟﾚｰﾄ
13	LHLDW0595FCZZ	AC	DD		C	Edge saddle(EDS2)	ｴｯｼﾞｻﾄﾙ

9 ｽｷｬﾅｰ連結ﾕﾆｯﾄ (Scanner joint unit)

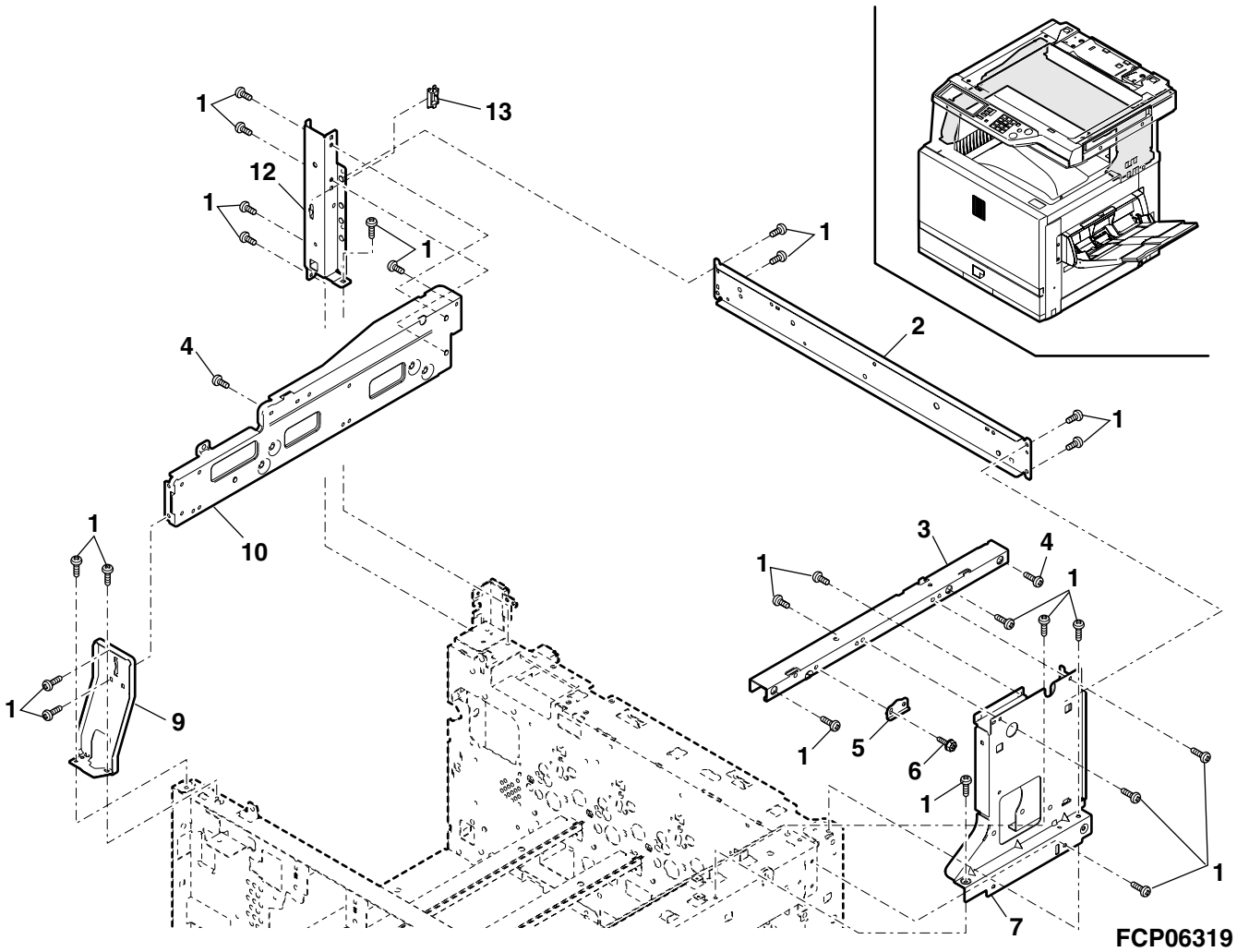

10 ｶｾｯﾄﾕﾆｯﾄ (Casette unit)

NO.	PARTS CODE	PRICE RANK Ex.	PRICE RANK Ja.	NEW MARK	PART RANK	DESCRIPTION	
1	JHNDP0164FCZ3	BL	HL	N	D	Tray Handle upper	ﾄﾚｲ取手上
2	XEBSE40P08000	AA	DD		C	Screw(4×8)	ﾋﾞｽ
3	PCOVP1643FCZ1	AU	EZ	N	D	Handle cover DSK upper	取手ｶﾊﾞｰ DSK 上
4	TLABZ4047FCZZ	AC	DJ		C	Enagy star label (U.S.A)	ｴﾅｼﾞｰｽﾀｰﾗﾍﾞﾙ
5	LPLTP5412FCZZ	AP	EQ		C	Side plate R	側板 R
6	LPLTM5414FCZ1	AR	EQ		C	Rotation plate	回転ﾌﾟﾚｰﾄ
7	PSHEZ3130FCZZ	AB	DD		C	Rotation plate sheet	回転ﾌﾟﾚｰﾄｼｰﾄｸﾗﾘｰﾉ
8	LX-BZ0884FCZZ	AB	DD		C	Pinion gear CGR	ﾋﾟﾆｵﾝｷﾞｬ CGR
9	LPiNS7062SCZZ	AA	DD		C	Pin(φ3-16)	ﾋﾟﾝ
10	NGERH0193FCZZ	AB	DD		C	Manual feed gear	手差しｷﾞｬ
11	PGiDH1833FCZ1	AC	DJ		C	Side plate guide	側板ｶﾞｲﾄﾞ
12	PTPE-0243FCZ1	AC	DJ		C	Side plate tape N	側板両面ﾃｰﾌﾟ N
13	LPLTP5411FCZZ	AQ	EQ		C	Side plate F	側板 F
14	MLEVP0755FCZ1	AE	DJ		C	Side plate F lever	側板 F ﾚﾊﾞｰ
15	MSPRC2631FCZZ	AC	DJ		C	Side plate F lever spring	側板 F ﾚﾊﾞｽﾌﾟﾘﾝｸﾞ
16	MLEVP0754FCZZ	AF	DS		C	Rear plate lever copier	後端ﾚﾊﾞｰｺﾋﾟｱ
17	MSPRC2640FCZZ	AC	DJ		C	Rear plate spring	後端板ｽﾌﾟﾘﾝｸﾞ
18	LPLTP5413FCZZ	AF	DS		C	Rear plate	後端板
21	XEBSD40P08000	AA	DD		C	Screw(4×8)	ﾋﾞｽ
22	LX-BZ0833FCZZ	AC	DD		C	Screw	ﾋﾞｽ
23	LSTPP0314FCZZ	AA	DJ		C	Stopper	ｽﾄｯﾊﾟｰ
24	NSFTZ2467FCZZ	AF	DS		C	Size detection rack shaft	ｻｲｽﾞ検知ﾗｯｸｼｬﾌﾄ
25	LDAiU0576FCZZ	AG	DX		C	Size detection block	ｻｲｽﾞ検知ﾌﾞﾛｯｸ
26	MSPRC2642FCZ1	AB	DJ		C	Tray earth spring	ｶｾｯﾄｱｰｽｽﾌﾟﾘﾝｸﾞ
27	NGERK1272FCZ1	AF	DS		C	Gear	ｷﾞｬ
29	CSFTZ2553FC01	AN	EG		C	Lift shaft unit	ﾘﾌﾄｼｬﾌﾄﾕﾆｯﾄ
30	NBRGP0626FCZZ	AC	DJ		C	Bearing(M8)	軸受け
31	XRESP70-08000	AA	DD		C	E type ring	E- ﾘﾝｸﾞ
32	TLABZ4238FCZZ	AD	DJ		C	Size display label (Japan only)	ｻｲｽﾞ表示ﾗﾍﾞﾙ
	TLABZ4239FCZZ	AD	DJ		C	Size display label (Except Japan)[AB Series]	ｻｲｽﾞ表示ﾗﾍﾞﾙ
	TLABZ4240FCZZ	AD	DJ		C	Size display label (Except Japan)[Inch Series]	ｻｲｽﾞ表示ﾗﾍﾞﾙ
33	MSPRC2669FCZZ	AB	DJ		C	Tray right earth spring	ｶｾｯﾄ右ｱｰｽｽﾌﾟﾘﾝｸﾞ
34	LPLTM5416FCZZ	AH	DX		C	Tray reinforce plate right	ｶｾｯﾄ補強右ﾌﾟﾚｰﾄ
36	LHLDZ1377FCZZ	AD	DJ		C	Rear plate holder	後端ﾌﾟﾚｰﾄﾎﾙﾀﾞｰ
37	LX-BZ0531FCZZ	AA	DD		C	Screw(4×8)	ﾋﾞｽ
39	GCASP0173FCZ2	BA	FX		C	550 sheets casette	550 枚ｶｾｯﾄ
40	LHLDW1226FCZZ	AB	DJ		C	Turn fastener	ﾀｰﾝﾌｧｽﾅｰ
	(Unit)						
901	CCASP0173FC15	BG	GT		E	Casette unit (Japan only)	ｶｾｯﾄﾕﾆｯﾄ
	CCASP0173FC16	BG	GT		E	Casette unit (Except Japan)[AB Series]	ｶｾｯﾄﾕﾆｯﾄ
	CCASP0173FC17	BF	GN		E	Casette unit (Except Japan)[Inch Series]	ｶｾｯﾄﾕﾆｯﾄ

10 ｶｾｯﾄﾕﾆｯﾄ (Casette unit)

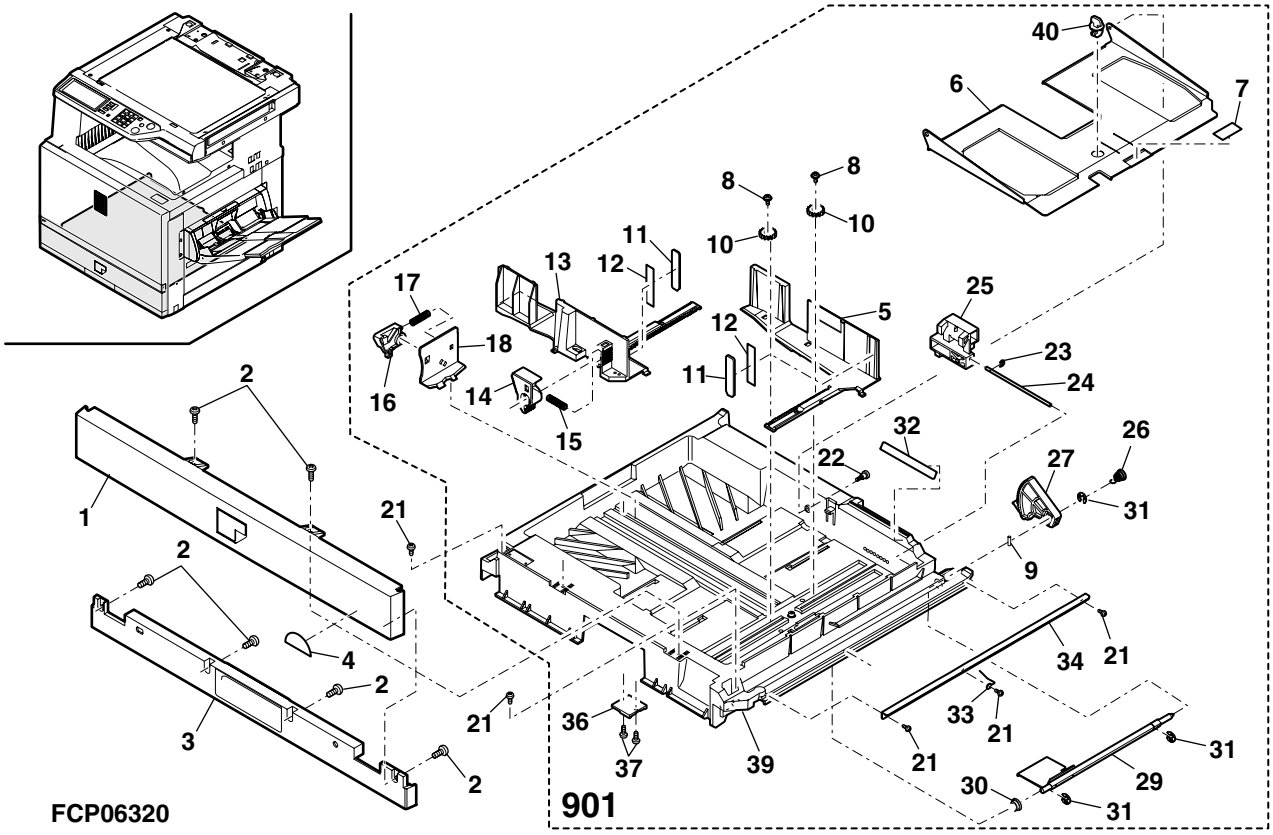

11 給紙ﾕﾆｯﾄ (Paper feed unit)

NO.	PARTS CODE	PRICE RANK Ex.	PRICE RANK Ja.	NEW MARK	PART RANK	DESCRIPTION	
1	PCASZ0299FCZZ	AF	DS	N	C	Belt connector case	ﾍﾞﾙﾄｺﾈｸﾀｹｰｽ
2	DHAｉ−3339FC11	AV	FG	N	C	Paper feed harness	給紙ﾊｰﾈｽ
3	XHBSE30P06000	AA	DD		C	Screw(3×6)	ﾋﾞｽ
4	MARMP0293FCZ1	AL	EB	N	C	Pick-up roller arm	呼込みﾛｰﾗｱｰﾑ
5	MSPRD3084FCZZ	AD	DJ	N	C	Pick up roller arm spring	呼込みﾛｰﾗｰｱｰﾑｽﾌﾟﾘﾝｸﾞ
6	MSPRC3074FCZZ	AC	DJ	N	C	Connector slide spring	ｺﾈｸﾀｽﾗｲﾄﾞｽﾌﾟﾘﾝｸﾞ
7	LX−BZ0850FCZZ	AC	DD		C	Screw	ﾋﾞｽ
8	PCLC−0321FCZZ	AT	EZ	N	B	PF clutch W	PF ｸﾗｯﾁ W
9	XRESP40−06000	AA	DD		C	E type ring	E-ﾘﾝｸﾞ
10	XRESP50−06000	AA	DD		C	E type ring	E-ﾘﾝｸﾞ
11	NBRGC0387FCZ1	AC	DJ		C	Bearing	軸受け
12	NSFTZ2700FCZZ	AQ	EQ	N	C	Paper feed roller shaft	給紙ﾛｰﾗｼｬﾌﾄ
13	PGｉDM1981FCZZ	AH	DX	N	C	Pick-up roller guide	呼込みﾛｰﾗｶﾞｲﾄﾞ
14	MSPRC3169FCZZ	AC	DJ	N	C	Pick-up spring	呼込みｽﾌﾟﾘﾝｸﾞ
15	NPLYZ0409FCZZ	AL	EB	N	C	Paper feed roller pulley	給紙ﾛｰﾗﾌﾟｰﾘｰ
16	NCPL−0049FCBZ	AT	EZ		C	MF separator cupling	ﾏﾙﾁ分離ｶｯﾌﾟﾘﾝｸﾞ
17	NROLR1411FCZZ	AK	EB	N	B	Paper feed separater roller	給紙分離ﾛｰﾗ
18	NSFTZ2591FCZZ	AF	DS		C	Pick-up roller shaft	呼込みﾛｰﾗｼｬﾌﾄ
19	NPLYZ0365FCZZ	AC	DJ		C	Pick-up roller pulley	呼込みﾛｰﾗﾌﾟｰﾘｰ
20	NBLTH0239FCZZ	AF	DX		C	Belt(55MXL3.2)	ﾍﾞﾙﾄ
21	NROLR1428FCZZ	AK	DX	N	B	Pick-up roller	呼込みﾛｰﾗ
22	VHPGP1A71L3−1	AG	DS	N	B	Photo sensor(GP1A71L3)	ﾌｫﾄｾﾝｻｰ
23	CFRM−1081FC01	AU	FG	N	C	Paper feed frame	給紙ﾌﾚｰﾑ
24	XEBSD40P08000	AA	DD		C	Screw(4×8)	ﾋﾞｽ
25	PGｉDM1983FCZZ	AS	EQ	N	C	PF upper front PG	給紙上前ﾍﾞｰﾊﾞｰｶﾞｲﾄﾞ
26	MLEVP0695FCZZ	AC	DJ		C	H Paper feeding lever	H 給紙ﾚﾊﾞｰ
27	LHLDZ1517FCZZ	AE	DS	N	C	Belt connector holder	ﾍﾞﾙﾄｺﾈｸﾀｰﾎﾙﾀﾞｰ
28	MSPRC3073FCZZ	AC	DJ	N	C	Belt connector spring	ﾍﾞﾙﾄｺﾈｸﾀｽﾌﾟﾘﾝｸﾞ
29	XHBSE40P08000	AA	DD		C	Screw(4×8)	ﾋﾞｽ
30	XHBSE30P08000	AA	DD		C	Screw(3×8)	ﾋﾞｽ
31	XEBSD40P08000	AA	DD		C	Screw(4×8)	ﾋﾞｽ
32	XHBSE40P08000	AA	DD		C	Screw(4×8)	ﾋﾞｽ
						(Unit)	
901	CFRM−1081DS51	BK	HG	N	E	Paper feed unit(Without No.29,30,31)	給紙ﾕﾆｯﾄ(No.29,30,31除く)

11 給紙ﾕﾆｯﾄ (Paper feed unit)

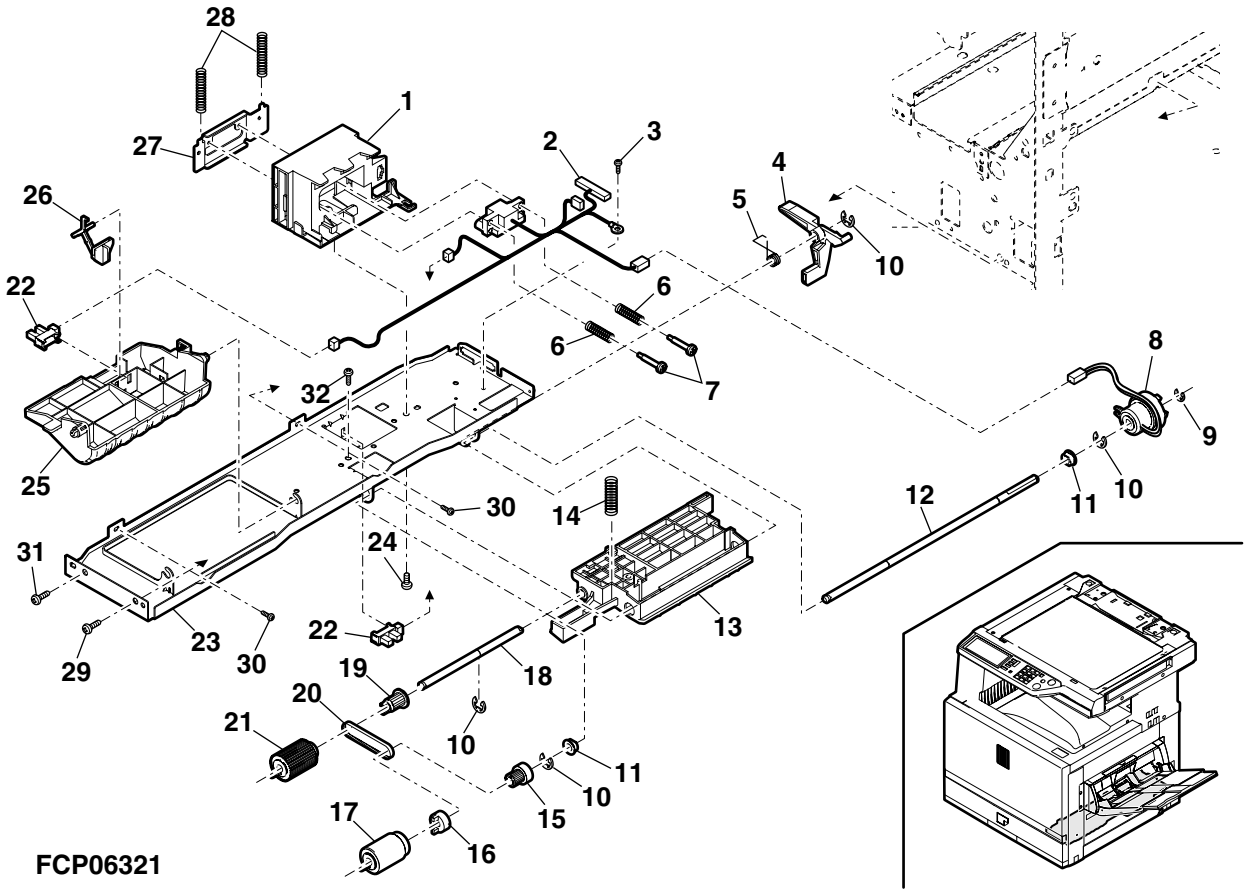

12 給紙駆動ﾕﾆｯﾄ (Paper feeding drive unit)

NO.	PARTS CODE	PRICE RANK Ex.	PRICE RANK Ja.	NEW MARK	PART RANK	DESCRIPTION	
1	CFRM−1063FC01	AU	EZ	N	C	Paper feeding drive frame	給紙駆動ﾌﾚｰﾑ
2	NBRGY2122SCZZ	AB	DD		C	Bearing	ﾍﾞｱﾘﾝｸﾞ
3	NSFTZ2688FCZZ	AL	EB	N	C	Multi output shaft	ﾏﾙﾁ出力ｼｬﾌﾄ
4	LPiNS0133FCZZ	AA	DD		C	Pin(φ2-10)	ﾍｲｺｳﾋﾟﾝ
5	PCLC−0297FCZZ	AU	FG		B	PS front clutch	PS 前ｸﾗｯﾁ
6	CPLTM5983FC01	AL	EB	N	C	Paper feed motor fixing plate	給紙ﾓｰﾀﾌﾞﾚｰﾄ
7	RMOTP0891FCZZ	BG	GT	N	B	Paper feed motor	給紙ﾓｰﾀ
8	XHBSE40P08000	AA	DD		C	Screw(4×8)	ﾋﾞｽ
10	NBRGC0651FCZZ	AD	DJ		C	Bearing	軸受け
11	XRESP70−08000	AA	DD		C	E type ring	E-ﾘﾝｸﾞ
12	XRESP40−06000	AA	DD		C	E type ring	E-ﾘﾝｸﾞ
13	PCLC−0298FCZZ	AT	EZ		B	Paper feed clutch	給紙ｸﾗｯﾁ
14	NGERH1497FCZZ	AE	DS	N	B	PF gear(37T)	給紙出力ｷﾞｬ
15	XRESP50−06000	AA	DD		C	E type ring	E-ﾘﾝｸﾞ
16	NGERH1252FCZZ	AD	DJ		C	Delivery change gear(21T)	排紙変速ｷﾞｬ
17	NSFTZ2687FCZZ	AK	EB	N	C	Transfer output shaft	搬送出力ｼｬﾌﾄ
18	QCNCM0999FCZZ	AC	DJ		C	Connector(BU02P-TR-PH)	ｺﾈｸﾀｰ
19	QCNCM1000FCZZ	AC	DJ		C	Connector(BU3P-TR-P-H)	ｺﾈｸﾀｰ
20	NGERH1496FCZZ	AE	DJ	N	C	PF reduction gear(65T)	給紙減速ｷﾞｬ
21	NGERH0111FCWZ	AD	DJ		C	Idle gear(24T)	ｱｲﾄﾞﾙｷﾞｬ
22	NGERH0867FCZZ	AC	DD		C	Delivery gear(20T)	排紙伝達ｷﾞｬ
23	NGERH0866FCZZ	AC	DD		B	Gear(22T)	ｷﾞｬ
24	NGERH1510FCZZ	AD	DJ	N	B	PS drive gear(20T)	PS 駆動ｷﾞｬ
25	LBNDJ0043FCZ1	AA	DJ		C	Band(SG-130)	ﾊﾞﾝﾄﾞ
26	XHBSE40P08000	AA	DD		C	Screw(4×8)	ﾋﾞｽ
	(Unit)						
901	CFRM−1063DS51	BF	GN	N	E	Paper feeding drive unit(Without No.7,26)	給紙駆動ﾕﾆｯﾄ(No.7,26 除く)

12 給紙駆動ﾕﾆｯﾄ (Paper feeding drive unit)

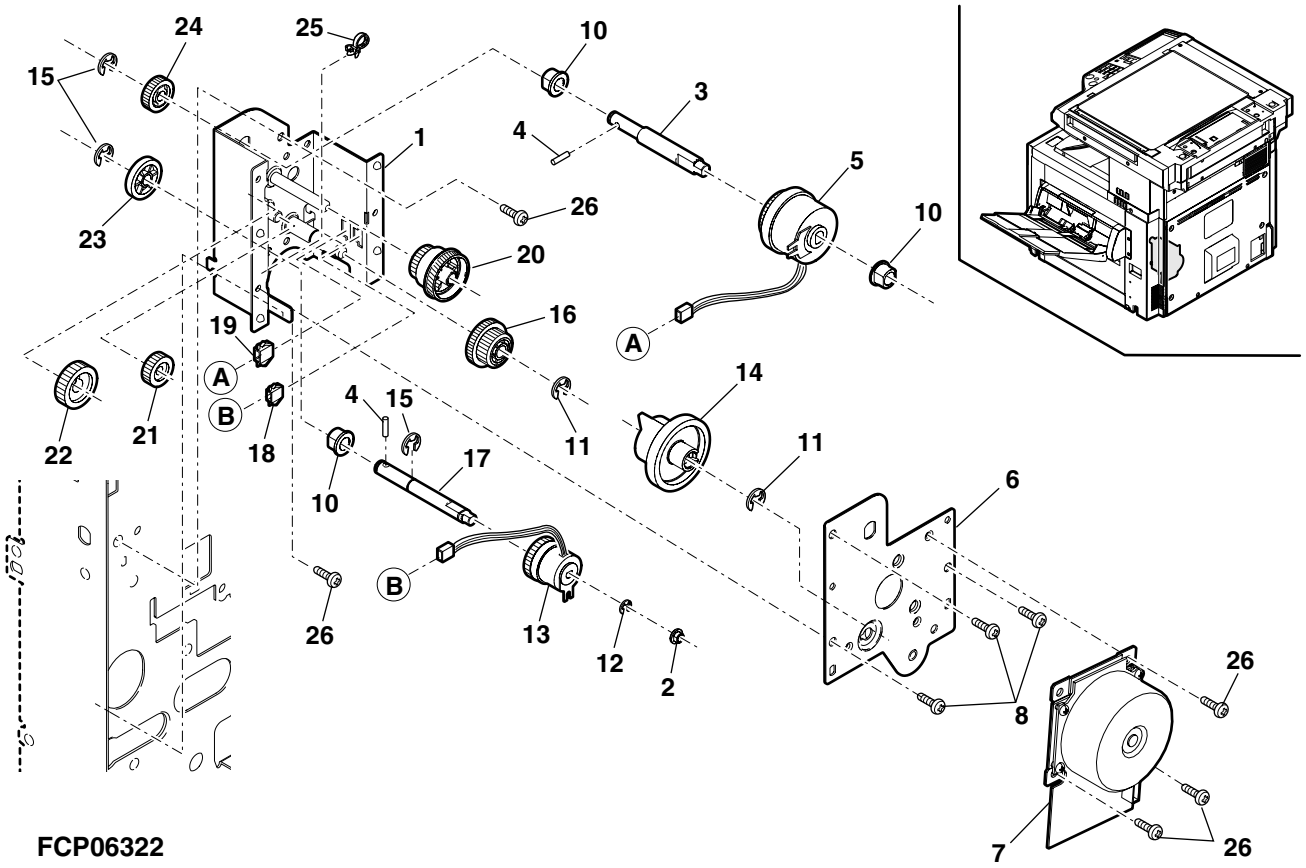

13 ﾏﾙﾁ手差しﾕﾆｯﾄ 1(Multi manual paper feeding unit 1)

NO.	PARTS CODE	PRICE RANK Ex.	PRICE RANK Ja.	NEW MARK	PART RANK	DESCRIPTION	
1	LHLDZ1524FCZZ	AK	DX	N	C	Tray fulcrum holder R	ﾄﾚｲ支点ﾎﾙﾀﾞｰR
2	XEBSE40P10000	AA	DD		C	Screw(4×10)	ﾋﾞｽ
3	PCOVP1653FCZZ	AN	EQ	N	C	MF rear cover 250	手差し後ｶﾊﾞｰ250
4	LSOU-0026QSCZ	BA	FX	N	C	Multi paper feed tray 2 upper	手差しﾄﾚｲ2 上
5	VHPGP1A71L3-1	AG	DS	N	B	Photo sensor(GP1A71L3)	ﾌｫﾄｾﾝｻｰ
6	QSW-B0017QSZZ	AF	DS	N	B	Tray detect switch	ｶｾｯﾄ検知ｽｲｯﾁ
7	MLEVP0035QSE1	AC	DJ		C	Original detect actuator	原稿検知ｱｸﾁｪｰﾀｰ
8	LSOU-0193FCZ5	AN	EQ	N	C	Slide tray L (100V Series)	ｽﾗｲﾄﾞﾄﾚｲ L
	LSOU-0193FCZZ	AP	EQ	N	C	Slide tray L (200V Series)	ｽﾗｲﾄﾞﾄﾚｲ L
9	DHAi-3359FC11	AQ	EQ	N	C	MF tray harness	手差しﾄﾚｲﾊｰﾈｽ
10	LSOU-0190FCZ5	AV	FG	N	C	Multi paper feed tray 250 lower (100V Series)	ﾏﾙﾁﾄﾚｲ 250 下
	LSOU-0190FCZZ	AT	EZ	N	C	Multi paper feed tray 250 lower (200V Series)	ﾏﾙﾁﾄﾚｲ 250 下
11	PGiDW2015FCZZ	AG	DS	N	C	Support guide	補助ｶﾞｲﾄﾞ
13	XEBSE30P08000	AA	DD		C	Screw(3×8)	ﾋﾞｽ
14	LPLTP6020FCZZ	AF	DS	N	C	Widtch detector fixing plate	幅検知取付けﾌﾟﾚｰﾄ
15	CPWBF0106RS51	AP	EQ		E	Multi paper feed VR PWB	ﾃｻｼ VR 基板ﾕﾆｯﾄ
16	NGERP1385FCZZ	AF	DS		C	Width detect pinion gear	幅検知ﾋﾟﾆｵﾝｷﾞﾔ
17	XEPSD30P06X00	AA	DD		C	Screw(3×6X)	ﾋﾞｽ
18	NGERR1386FCZZ	AE	DJ		C	Width detect rack gear	幅検知ﾗｯｸｷﾞﾔ
19	RDTCH0155FCZZ	AU	EZ	N	B	Hygrometer sensor	湿度ｾﾝｻ - ﾕﾆｯﾄ
20	LHLDZ1521FCZZ	AE	DJ	N	C	Haness holder	ﾊｰﾈｽﾎﾙﾀﾞｰ
21	LSOU-0189FCZ5	AT	EZ	N	C	Multi paper feed tray 250 upper (100V Series)	ﾏﾙﾁﾄﾚｲ 250 上
	LSOU-0189FCZZ	AU	EZ	N	C	Multi paper feed tray 250 upper (200V Series)	ﾏﾙﾁﾄﾚｲ 250 上
22	MSPRC2114FCZZ	AB	DJ		C	Lock spring	ﾛｯｸｽﾌﾟﾘﾝｸﾞ
23	PTME-0271FCZZ	AD	DJ		C	Tray lock pawl	ﾄﾚｲﾛｯｸ爪
24	PGiDM1987FCZZ	AG	DS	N	C	Size guide 250R	ｻｲｽﾞｶﾞｲﾄﾞ 250R
25	PGiDM1986FCZZ	AF	DS	N	C	Size guide 250F	ｻｲｽﾞｶﾞｲﾄﾞ 250F
26	PCOVP1652FCZZ	AN	EG	N	C	MF front cover 250	手差し前ｶﾊﾞｰ250
27	LHLDZ1523FCZZ	AH	DX	N	C	Tray fulcrum holder F	ﾄﾚｲ支点ﾎﾙﾀﾞｰF
28	XEBSD30P06000	AA	DD		C	Screw(3×6)	ﾋﾞｽ
29	XHBSE40P08000	AA	DD		C	Screw(4×8)	ﾋﾞｽ
30	TLABZ4759FCZZ	AH	DX	N	C	MF size label (Japan only)	ﾃｻｼｻｲｽﾞﾗﾍﾞﾙ
	(Unit)						
901	DUNT-7187DSZZ	BV	RB	N	E	Multi paper feed unit(Include Block 14,15 Without No.29,30) (100V Series) ﾏﾙﾁ給紙ﾕﾆｯﾄ(ﾌﾞﾛｯｸ 14,15 含む。No.29,30 含まない)	
	DUNT-7187DS11	BV	RB	N	E	Multi paper feed unit(Include Block 14,15 Without No.29,30) (200V Series) ﾏﾙﾁ給紙ﾕﾆｯﾄ(ﾌﾞﾛｯｸ 14,15 含む。No.29,30 含まない)	

13 ﾏﾙﾁ手差しﾕﾆｯﾄ 1(Multi manual paper feeding unit 1)

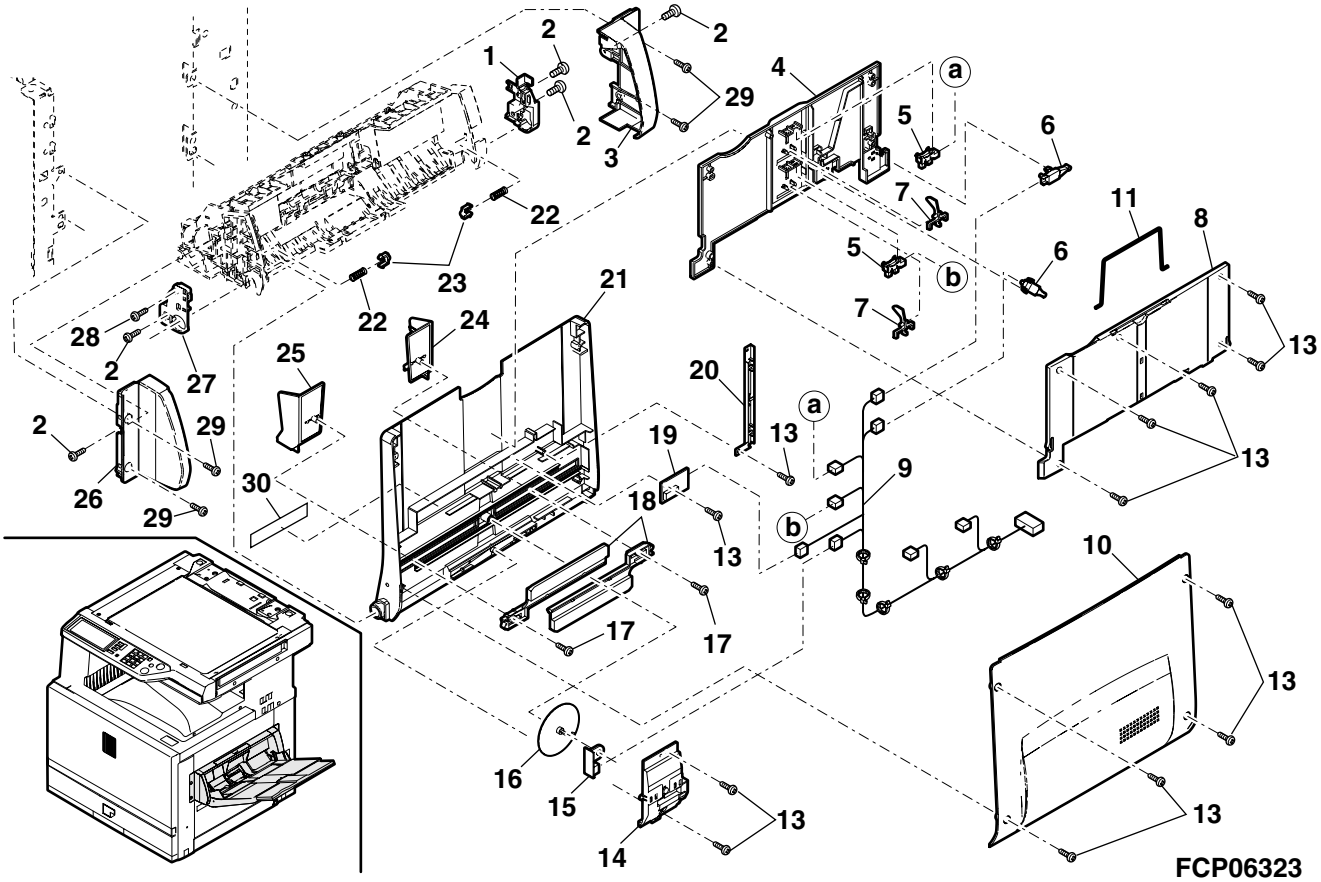

14 ﾏﾙﾁ手差しﾕﾆｯﾄ 2(Multi manual paper feeding unit 2)

NO.	PARTS CODE	PRICE RANK Ex.	PRICE RANK Ja.	NEW MARK	PART RANK	DESCRIPTION	
1	PCOVP1639FCZ5	AR	EQ	N	C	MF upper cover (100V Series)	手差し上ｶﾊﾞｰ
	PCOVP1639FCZZ	AQ	EQ	N	C	MF upper cover (200V Series)	手差し上ｶﾊﾞｰ
2	MSPRT3121FCZ1	AC	DJ	N	C	Roller pressure spring	ﾛｰﾗｰ加圧ｽﾌﾟﾘﾝｸﾞ
3	NSFTZ2707FCZZ	AH	DX	N	C	PS front follow roller shaft	PS 前従動ﾛｰﾗｼｬﾌﾄ
4	NROLP1060FCZZ	AF	DS		C	U-turn roller	Uﾀｰﾝﾛｰﾗ
6	PGiDM1974FCZ5	AV	FG	N	C	MF upper PG (100V Series)	手差し上ﾍﾟｰﾊﾟｰｶﾞｲﾄﾞ
	PGiDM1974FCZ1	AV	FG	N	C	MF upper PG (200V Series)	手差し上ﾍﾟｰﾊﾟｰｶﾞｲﾄﾞ
7	PSHEP5037FCZZ	AC	DJ	N	C	Upper PG sheet	上 PG ｼｰﾄ
8	XRESP50−06000	AA	DD		C	E type ring	E-ﾘﾝｸﾞ
9	NBRGM0096FCZ1	AC	DJ		C	Bearing	軸受け
10	PCLC−0317FCZZ	AR	EQ	N	B	Pick-up start limiter	呼込み起動ﾘﾐｯﾀｰ
11	MSPRD3100FCZZ	AC	DJ	N	C	Stopper arm spring	ｽﾄｯﾊﾟｰｱｰﾑｽﾌﾟﾘﾝｸﾞ
12	MLNKP0027FCZZ	AE	DJ	N	C	Pick-up link	呼込みﾘﾝｸ
13	CPLTM6071FC01	AK	DX	N	C	Stopper support plate	ｽﾄｯﾊﾟｰ支持ﾌﾟﾚｰﾄ
14	PGiDM1985FCZZ	AF	DS	N	C	Support PG	補助ﾍﾟｰﾊﾟｰｶﾞｲﾄﾞ
15	PSHEP5071FCZZ	AB	DJ	N	C	Paper guide sheet	用紙ｶﾞｲﾄﾞｼｰﾄ
17	PCOVP1658FCZ1	AG	DX	N	C	Connected cover	連動ｶﾊﾞｰ
18	PCOVP1642FCZ1	AL	EB	N	C	Arm cover 250	ｱｰﾑｶﾊﾞｰ 250
19	LSTPP0366FCZZ	AD	DJ	N	C	Stopper	ｽﾄｯﾊﾟｰ
20	MLEVP0871FCZZ	AD	DJ	N	C	Stopper release lever	ｽﾄｯﾊﾟ解除ﾚﾊﾞｰ
21	XRESP40−06000	AA	DD		C	E type ring	E-ﾘﾝｸﾞ
22	XEBSE40P10000	AA	DD		C	Screw(4×10)	ﾋﾞｽ
23	PSHEP5022FCZZ	AC	DJ	N	C	Pick-up guide sheet	呼込みｶﾞｲﾄﾞｼｰﾄ
24	NSFTZ2701FCZZ	AK	DX	N	C	Pick-up roller shaft	呼込みﾛｰﾗｼｬﾌﾄ
25	NPLYZ0398FCZZ	AC	DJ		C	Pick-up roller pulley(22T)	呼込みﾛｰﾗﾌﾟｰﾘｰ
26	NBLTT7029XCZZ	AG	DS		C	Drive belt	駆動ﾍﾞﾙﾄ
27	NROLR1428FCZZ	AK	DX	N	B	Pick-up roller	呼込みﾛｰﾗ
28	NROLR1311FCZZ	AN	EG		B	Paper feed separator roller	給紙分離ﾛｰﾗ
29	NCPL−0049FCZZ	AH	DX		C	One-way cupling	ﾜﾝｳｪｲｶｯﾌﾟﾘﾝｸﾞ
30	NPLYZ0404FCZZ	AE	DJ	N	C	MF drive pulley	手差し駆動ﾌﾟｰﾘｰ
31	MARMP0294FCZ1	AM	EG	N	C	Pick-up arm 250	呼込みｱｰﾑ 250
32	CSFTZ2698DS51	AQ	EQ	N	E	Multi paper feed roller shaft	手差し給紙ﾛｰﾗｰｼｬﾌﾄ
33	PSHEP5086FCZZ	AB	DJ	N	C	Wave prevention sheet	波打防止ｼｰﾄ
34	NBRGC0280FCZZ	AB	DD		C	Bearing	軸受け
35	PSHEP5119FCZZ	AB	DJ		C	Harness guide sheet	ﾊｰﾈｽｶﾞｲﾄﾞｼｰﾄ
	(Unit)						
901	DUNT−7187DSZZ	BV	RB	N	E	Multi paper feed unit(Include Block 13,15) ﾏﾙﾁ給紙ﾕﾆｯﾄ(ﾌﾞﾛｯｸ 13,15 含む)	(100V Series)
	DUNT−7187DS11	BV	RB	N	E	Multi paper feed unit(Include Block 13,15) ﾏﾙﾁ給紙ﾕﾆｯﾄ(ﾌﾞﾛｯｸ 13,15 含む)	(200V Series)

14 ﾏﾙﾁ手差しﾕﾆｯﾄ 2(Multi manual paper feeding unit 2)

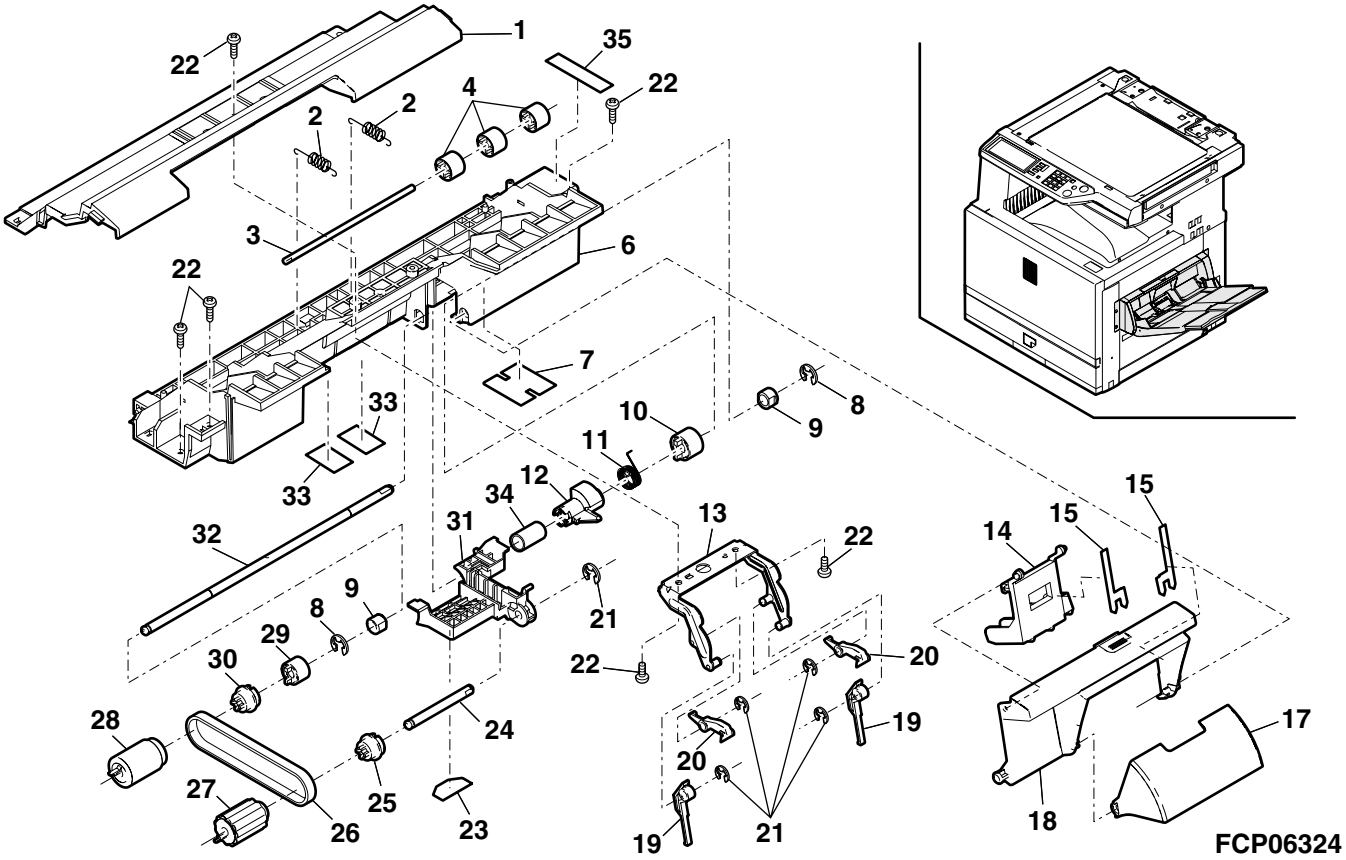

15 ﾏﾙﾁ手差しﾕﾆｯﾄ 3(Multi manual paper feeding unit 3)

NO.	PARTS CODE	PRICE RANK Ex.	PRICE RANK Ja.	NEW MARK	PART RANK	DESCRIPTION	
1	NROLR1400FCZZ	AS	EZ	N	C	PS front roller	PS 前ﾛｰﾗ
2	PSHEP4971FCZZ	AC	DJ	N	C	PF guide sheet mylar	給紙ｶﾞｲﾄﾞﾏｲﾗｰ
3	PSHEZ4788FCZ1	AD	DJ		C	Manual feed sheet BE	手差しｼｰﾄ BE
4	XRESP70−08000	AA	DD		C	E type ring	E-ﾘﾝｸﾞ
5	NGERH0317FCZZ	AC	DJ		C	DV gear(18T)	DV ｷﾞﾔ
6	LPｉNS0155FCZZ	AA	DD		C	Pin(φ3-10)	ﾍｲｺｳﾋﾟﾝ
7	NBRGC0504FCZZ	AC	DJ		C	Bearing	軸受け
8	NGERH1526FCZZ	AE	DJ	N	C	Reverse drive gear	逆転駆動ｷﾞﾔ
9	MSPRC3122FCZZ	AD	DJ	N	C	Shaft earth spring	ｼｬﾌﾄｱｰｽｽﾌﾟﾘﾝｸﾞ
10	NGERH1536FCZZ	AC	DJ	N	C	Idle gear(18T)	ｱｲﾄﾞﾙｷﾞﾔ
11	NGERH1511FCZZ	AE	DJ	N	C	Idle gear(21/24)	ｱｲﾄﾞﾙｷﾞﾔ
12	CFRM−1075FC01	AN	EG	N	C	Malti paper feed drive frame	手差し駆動ﾌﾚｰﾑ
13	XEBSE40P10000	AA	DD		C	Screw(4×10)	ﾋﾞｽ
15	LPｉNS0133FCZZ	AA	DD		C	Pin(φ2-10)	ﾍｲｺｳﾋﾟﾝ
17	NGERH1383FCZZ	AD	DJ		C	Fusing drive gear(30T)	定着駆動ｷﾞﾔ
18	NBRGM0096FCZ1	AC	DJ		C	Bearing	軸受け
19	PCLC−0298FCZZ	AT	EZ		B	Paper feed clutch	給紙ｸﾗｯﾁ
20	XRESP40−06000	AA	DD		C	E type ring	E-ﾘﾝｸﾞ
21	XRESP50−06000	AA	DD		C	E type ring	E-ﾘﾝｸﾞ
22	PCOVP1640FCZ5	AL	EB	N	C	MF lower cover (100V Series)	手差し下ｶﾊﾞｰ
	PCOVP1640FCZ1	AN	EQ	N	C	MF lower cover (200V Series)	手差し下ｶﾊﾞｰ
23	MARMP0295FCZZ	AF	DS	N	C	Separator roller release arm	分離ﾛｰﾗ解除ｱｰﾑ
24	MLEVP0852FCZZ	AG	DS	N	C	PE actuator 250	PE ｱｸﾁｭｴｰﾀ 250
25	MSPRD3099FCZ1	AC	DJ	N	C	RE actuator spring	RE ｱｸﾁｴｰﾀｽﾌﾟﾘﾝｸﾞ
26	PCOVP1641FCZZ	AG	DS	N	C	Maintenace cover	ﾒﾝﾃﾅﾝｽｶﾊﾞｰ
27	MLNKP0029FCZZ	AD	DJ	N	C	RE actuator link	RE ｱｸﾁｭｴｰﾀﾘﾝｸ
28	VHPGP1A71L3−1	AG	DS	N	B	Photo sensor(GP1A71L3)	ﾌｫﾄｾﾝｻｰ
29	MSPRC3066FCZZ	AC	DJ	N	C	Separater roller spring	分離ﾛｰﾗｽﾌﾟﾘﾝｸﾞ
30	LHLDZ1520FCZZ	AC	DJ	N	C	Separate roller shaft holder	分離ﾛｰﾗｰ軸ﾎﾙﾀﾞｰ
33	CSFTZ2702DS51	AP	EQ	N	E	Multi paper feed roller separate shaft	手差し分離ﾛｰﾗｰｼｬﾌﾄ
34	PCLC−0316FCZ1	AR	EQ	N	B	Sparater roller torque limiter	分離ﾛｰﾗﾄﾙｸﾘﾐｯﾀｰ
35	NROLR1311FCZZ	AN	EG		B	Paper feed separator roller	給紙分離ﾛｰﾗ
36	PGｉDM1973FCZ5	AS	EQ	N	C	MF lower PG 250 (100V Series)	手差し下ﾍﾟｰﾊﾟｰｶﾞｲﾄﾞ 250
	PGｉDM1973FCZZ	AU	EZ	N	C	MF lower PG 250 (200V Series)	手差し下ﾍﾟｰﾊﾟｰｶﾞｲﾄﾞ 250
37	PSHEZ5088FCZZ	AF	DS		C	Guide sheet	ｶﾞｲﾄﾞｼｰﾄ
38	LSTYM0295FCZZ	AL	EB	N	C	Multi paper feed PG stay	手差し上 PG ｽﾃｰ
39	PSHEP4970FCZ2	AE	DS	N	C	PS front guide mylar	PS 前ｶﾞｲﾄﾞﾏｲﾗｰ
40	PSHEP4993FCZ2	AE	DS	N	C	PS front guide sheet B	PS 前ｶﾞｲﾄﾞｼｰﾄB
41	LX−WZ2011SCZZ	AA	DD		C	Washer	ﾎﾟﾘｽﾗｲﾀﾞｰ
	(Unit)						
901	DUNT−7187DSZZ	BV	RB	N	E	Multi paper feed unit(Include Block 13,14) ﾏﾙﾁ給紙ﾕﾆｯﾄ(ﾌﾞﾛｯｸ 13,14 含む)	(100V Series)
	DUNT−7187DS11	BV	RB	N	E	Multi paper feed unit(Include Block 13,14) ﾏﾙﾁ給紙ﾕﾆｯﾄ(ﾌﾞﾛｯｸ 13,14 含む)	(200V Series)

15 ﾏﾙﾁ手差しﾕﾆｯﾄ 3(Multi manual paper feeding unit 3)

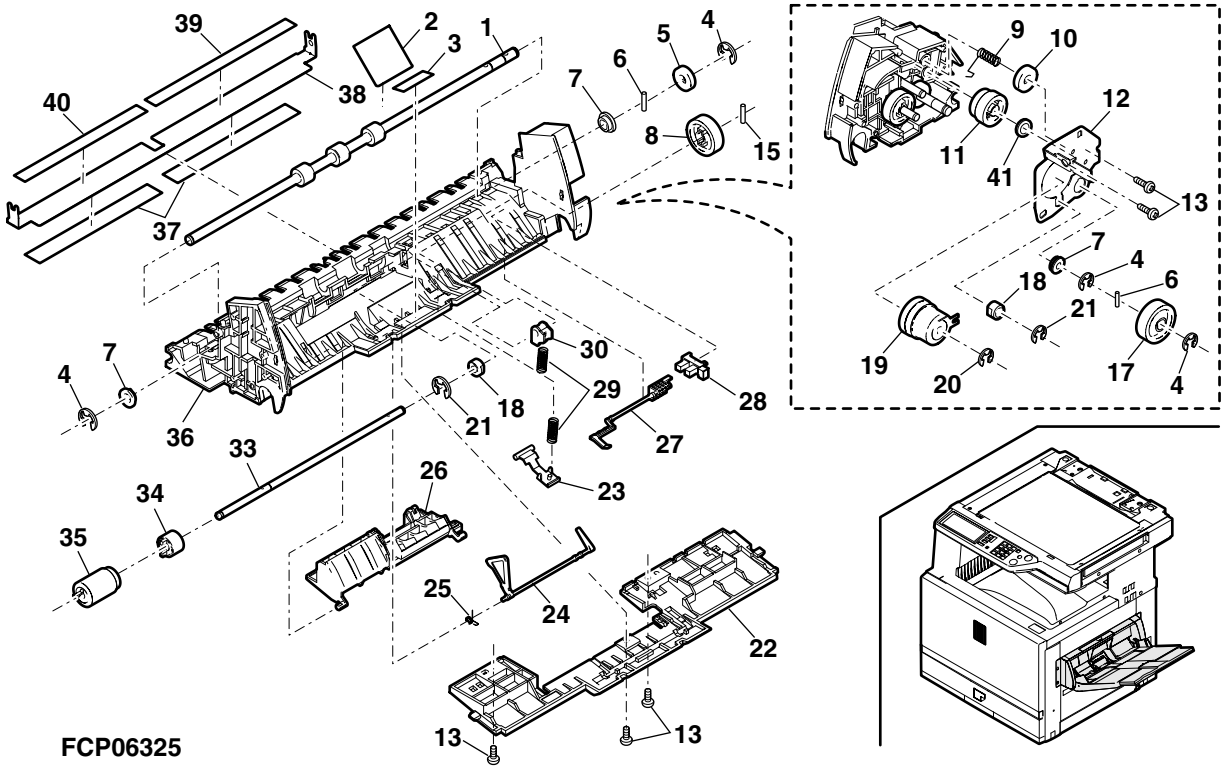

16 縦搬送ｶﾞｲﾄﾞﾕﾆｯﾄ (Vertical transport guide unit)

NO.	PARTS CODE	PRICE RANK Ex.	PRICE RANK Ja.	NEW MARK	PART RANK	DESCRIPTION		
1	PGiDM1977FCZZ	AN	EG	N	C	Vertical transfer guide R		縦搬送ｶﾞｲﾄﾞ右
2	NROLP0896FCZZ	AC	DD		C	Transport sub roller		搬送従動ﾛｰﾗ
3	NSFTZ2704FCZZ	AL	EB	N	C	Vertical transfer follow shaft		縦搬送従動ｼｬﾌﾄ
4	MSPRT3094FCZ1	AC	DJ	N	C	Transfer spring 1		搬送ｽﾌﾟﾘﾝｸﾞ 1
5	XEBSE30P08000	AA	DD		C	Screw(3×8)		ﾋﾞｽ
6	LPLTP6019FCZZ	AD	DJ	N	C	Release fulcrum plate		解除支点ﾌﾟﾚｰﾄ
7	MLEVP0853FCZ1	AF	DS	N	C	Guide lock release lever		GID ﾛｯｸ解除ﾚﾊﾞｰ
8	PMLT-1305FCZZ	AC	DJ	N	C	Right door cushion upper		右ﾄﾞｱﾓﾙﾄｳｴ
9	MSPRD3093FCZ1	AC	DJ	N	C	Look release spring		ﾛｯｸ解除ｽﾌﾟﾘﾝｸﾞ
10	PMLT-1304FCZZ	AC	DJ	N	C	Right door cushion FR		右ﾄﾞｱﾓﾙﾄ FR
11	GCAB-0983FCZ5	AQ	EQ	N	C	Right door cabinet	(100V Series)	右ﾄﾞｱｷｬﾋﾞ
	GCAB-0983FCZZ	AS	EQ	N	C	Right door cabinet	(200V Series)	右ﾄﾞｱｷｬﾋﾞ
12	PMLT-1313FCZZ	AC	DJ	N	C	Right door cushion R		右ﾄﾞｱﾓﾙﾄ R
13	PCOVP1707FCZZ	AG	DX	N	D	LCC cover N		LCC ｶﾊﾞｰ N
14	XEBSE40P08000	AA	DD		C	Screw(4×8)		ﾋﾞｽ
15	LSTPP0275FCZZ	AE	DS		C	Stopper		ｽﾄｯﾊﾟｰ
16	LHLDZ1514FCZZ	AK	DX	N	C	Right door fulcrum holder F		右ﾄﾞｱ支点ﾎﾙﾀﾞｰF
17	XHBSE40P12000	AA	DD		C	Screw(4×12)		ﾋﾞｽ
19	PMLT-1303FCZ1	AD	DJ	N	C	Right door cushion lower		右ﾄﾞｱﾓﾙﾄ下
20	PMLT-1317FCZZ	AH	DX	N	C	Right door cushion middle		右ﾄﾞｱﾓﾙﾄ中
21	XRESP70-08000	AA	DD		C	E type ring	(Except Japan)	E-ﾘﾝｸﾞ
22	NGERH0111FCWZ	AD	DJ		C	Idle gear(24T)	(Except Japan)	ｱｲﾄﾞﾙｷﾞﾔ
23	MARMP0297FCZZ	AB	DJ	N	C	LCC transport roller gear arm	(Except Japan)	LCC 搬送ﾛｰﾗｷﾞｱｱｰﾑ
24	NBRGP0626FCZZ	AC	DJ		C	Bearing(M8)	(Except Japan)	軸受け
25	MSPRC2616FCZZ	AC	DJ		C	DV drive spring	(Except Japan)	DV ﾄﾞﾗｲﾌﾞｽﾌﾟﾘﾝｸﾞ
26	LSTPP0274FCZZ	AA	DD		C	Stopper	(Except Japan)	ｽﾄｯﾊﾟｰ
27	NROLR1406FCZZ	AM	EG	N	C	LCC transport roller	(Except Japan)	LCC 搬送ﾛｰﾗ
28	NBRGC0188FCZZ	AB	DD		C	Bearing	(Except Japan)	軸受け
29	XEBSE30P08000	AA	DD		C	Screw(3×8)	(Except Japan)	ﾋﾞｽ
30	PGiDM1990FCZZ	AH	DX	N	C	LCC transport guide L	(Except Japan)	LCC 搬送ｶﾞｲﾄﾞ L
31	PGiDM1989FCZZ	AH	DX	N	C	LCC transport guide R	(Except Japan)	LCC 搬送ｶﾞｲﾄﾞ R
32	PCLR-0442FCZZ	AD	DJ		C	Sub collar	(Except Japan)	補助ｺﾛ
33	NSFTZ2703FCZZ	AF	DS	N	C	LCC transport sub shaft	(Except Japan)	LCC 搬送従動ｼｬﾌﾄ
34	MSPRT3092FCZZ	AC	DJ	N	C	LCC transport spring	(Except Japan)	LCC 搬送ｽﾌﾟﾘﾝｸﾞ
35	LPiNS0155FCZZ	AA	DD		C	Pin(φ3-10)	(Except Japan)	ﾍｲｺｳﾋﾟﾝ
36	PSHEP5115FCZZ	AC	DJ	N	C	Vertical transfer mayler		縦搬送ﾏｲﾗｰ
	(Unit)							
901	CGiDM1977DS51	BA	FX	N	E	Vertical transfer guide unit(Without No.15,16,17) 縦搬送ｶﾞｲﾄﾞﾕﾆｯﾄ (No.15,16,17 除く)	(Japan only)	
	CGiDM1977DS52	BC	GJ	N	E	Vertical transfer guide unit(Without No.15,16,17) 縦搬送ｶﾞｲﾄﾞﾕﾆｯﾄ (No.15,16,17 除く)	(Except Japan)[100V Series]	
	CGiDM1977DS53	BC	GJ	N	E	Vertical transfer guide unit(Without No.15,16,17) 縦搬送ｶﾞｲﾄﾞﾕﾆｯﾄ (No.15,16,17 除く)	(Except Japan)[200V Series]	

16 縦搬送ｶﾞｲﾄﾞﾕﾆｯﾄ (Vertical transport guide unit)

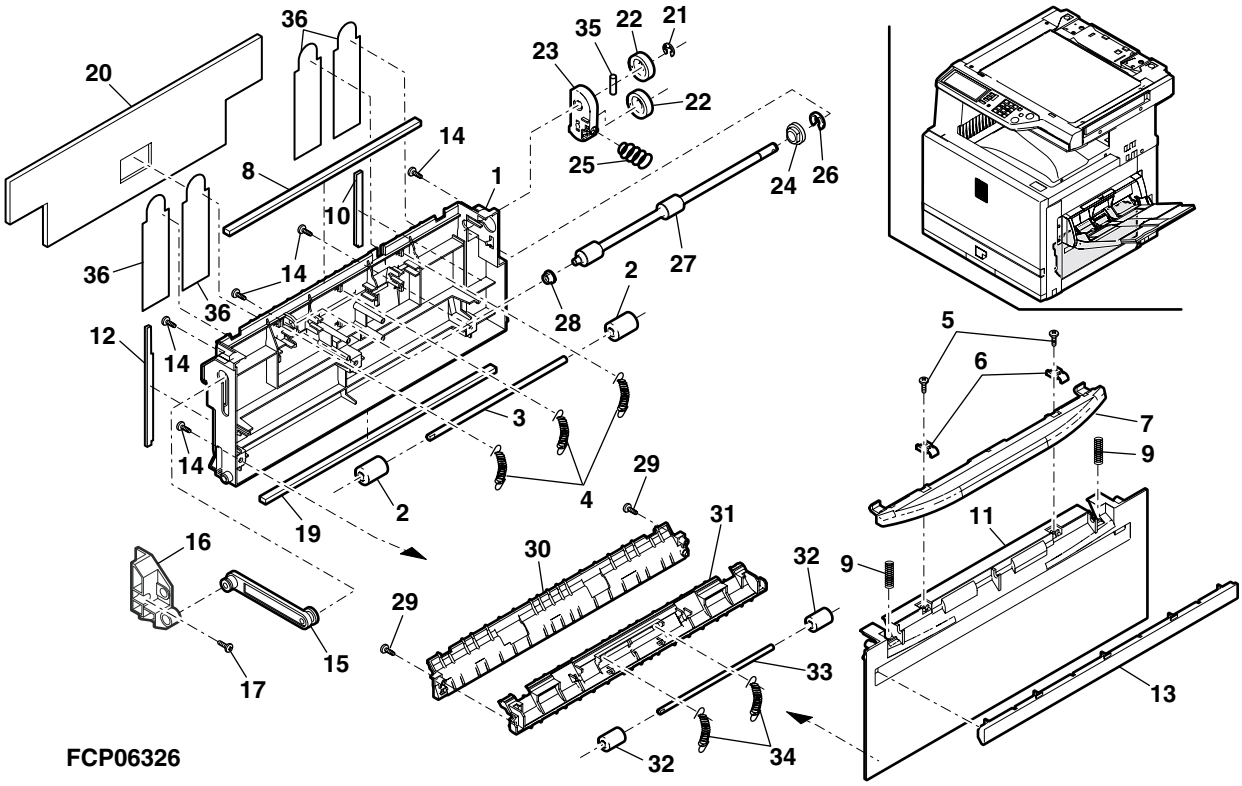

17 ｶｾｯﾄｶﾞｲﾄﾞ R・縦搬送下ﾕﾆｯﾄ (Cassette guide R/Vertical transport lower unit)

NO.	PARTS CODE	PRICE RANK Ex.	PRICE RANK Ja.	NEW MARK	PART RANK	DESCRIPTION	
1	MLEVP0854FCZZ	AC	DJ	N	C	Transfer actuator	搬送ｱｸﾁｭｴｰﾀ
2	MSPRD3067FCZZ	AC	DJ	N	C	Actuator spring	ｱｸﾁｭｴｰﾀ復帰ｽﾌﾟﾘﾝｸﾞ
3	VHPGP1A71L3-1	AG	DS	N	B	Photo sensor(GP1A71L3)	ﾌｫﾄｾﾝｻｰ
4	DHAi-3341FCZZ	AH	DX	N	C	PFD harness	PFD ﾊｰﾈｽ
5	XEBSD30P16000	AA	DD		C	Screw(3×16)	ﾋﾞｽ
6	QSW-M0502FCZZ	AH	DX		B	Door switch(AM51632C531)	ﾄﾞｱｽｲｯﾁ
7	NGERH1245FCZZ	AF	DS		C	Transport drive gear(28T)	搬送駆動ｷﾞﾔ
8	NGERH0111FCWZ	AD	DJ		C	Idle gear(24T)	ｱｲﾄﾞﾙｷﾞﾔ
9	XRESP70-08000	AA	DD		C	E type ring	E-ﾘﾝｸﾞ
10	LSTPP0274FCZZ	AA	DD		C	Stopper	ｽﾄｯﾊﾟｰ
11	NBRGP0626FCZZ	AC	DJ		C	Bearing(M8)	軸受け
12	LPiNS0096FCZZ	AB	DD		C	Pin(φ3-12)	ﾋﾟﾝ
13	LPiNS0155FCZZ	AA	DD		C	Pin(φ3-10)	ﾍｲｺｳﾋﾟﾝ
14	NROLR1401FCZZ	AS	EQ	N	C	Vertical tansfer roller	縦搬送ﾛｰﾗ
15	NBRGC0188FCZZ	AB	DD		C	Bearing	軸受け
16	NROLR1429FCZZ	AS	EQ	N	C	Vertical tansfer roller lower	縦搬送ﾛｰﾗ下
18	PGiDM1802FCZZ	AK	DX		C	Paper feed enter PG	給紙口ﾍﾟｰﾊﾟｰｶﾞｲﾄﾞ
19	XEBSE40P08000	AA	DD		C	Screw(4×8)	ﾋﾞｽ
20	PGiDM1988FCZZ	AS	EZ	N	C	Vertical transfer lower PG	縦搬送下 PG
21	NROLP0896FCZZ	AC	DD		C	Transport sub roller	搬送従動ﾛｰﾗ
22	LX-BZ0960FCZZ	AC	DD		C	Screw	ﾋﾞｽ
23	MSPRT3094FCZ1	AC	DJ	N	C	Transfer spring 1	搬送ｽﾌﾟﾘﾝｸﾞ 1
24	NSFTZ2704FCZZ	AL	EB	N	C	Vertical transfer follow shaft	縦搬送従動ｼｬﾌﾄ
25	PCOVP1509FCZZ	AH	DX		D	Transport stay R cover	搬送ｽﾃｰ R ｶﾊﾞｰ
26	XEBSD30P08000	AA	DD		C	Screw(3×8)	ﾋﾞｽ
27	LFiX-0524FCZZ	AC	DJ		C	PG collar holder	PG ｺﾛ押え
28	PCLR-0450FCZZ	AD	DJ		C	PG collar	PG ｺﾛ
29	NBLTH0376FCZZ	AF	DS	N	C	Sub roller belt	補助ﾛｰﾗﾍﾞﾙﾄ
30	NPLYZ0403FCZZ	AD	DJ	N	C	Sub roller pulley	補助ﾛｰﾗﾌﾟｰﾘｰ
31	PRNGP0081FCZZ	AA	DJ		C	Ring(E4)	ﾘﾝｸﾞ
32	PSHEZ5007FCZZ	AF	DS	N	C	Sub belt sheet	補助ﾍﾞﾙﾄｼｰﾄ
33	MSPRP3105FCZZ	AC	DJ	N	C	Transfer roller earth spring	搬送ﾛｰﾗｱｰｽ板ﾊﾞﾈ
35	PGiDM1978FCZZ	AW	FG	N	C	Cassette guide R	ｶｾｯﾄｶﾞｲﾄﾞ R
36	PGiDM1984FCZZ	AF	DS	N	C	PF lower front PG	給紙下前ﾍﾟｰﾊﾟｰｶﾞｲﾄﾞ
37	MSPRC3085FCZ1	AC	DJ	N	C	Separator roller pressure spring	分離ﾛｰﾗ加圧ｽﾌﾟﾘﾝｸﾞ
40	XRESP50-06000	AA	DD		C	E type ring	E-ﾘﾝｸﾞ
41	CSFTZ2706DS51	AP	EQ	N	C	Separate roller shaft	分離ﾛｰﾗｼｬﾌﾄ
42	NROLR1411FCZZ	AK	EB	N	B	Paper feed separater roller	給紙分離ﾛｰﾗ
43	PCLC-0316FCZ1	AR	EQ	N	B	Sparater roller torque limiter	分離ﾛｰﾗﾄﾙｸﾘﾐｯﾀｰ
44	PGiDM1982FCZZ	AF	DS	N	C	Separater roller guide	分離ﾛｰﾗｶﾞｲﾄﾞ
45	XHBSE40P08000	AA	DD		C	Screw(4×8)	ﾋﾞｽ

17 ｶｾｯﾄｶﾞｲﾄﾞ R・縦搬送下ﾕﾆｯﾄ (Cassette guide R/Vertical transport lower unit)

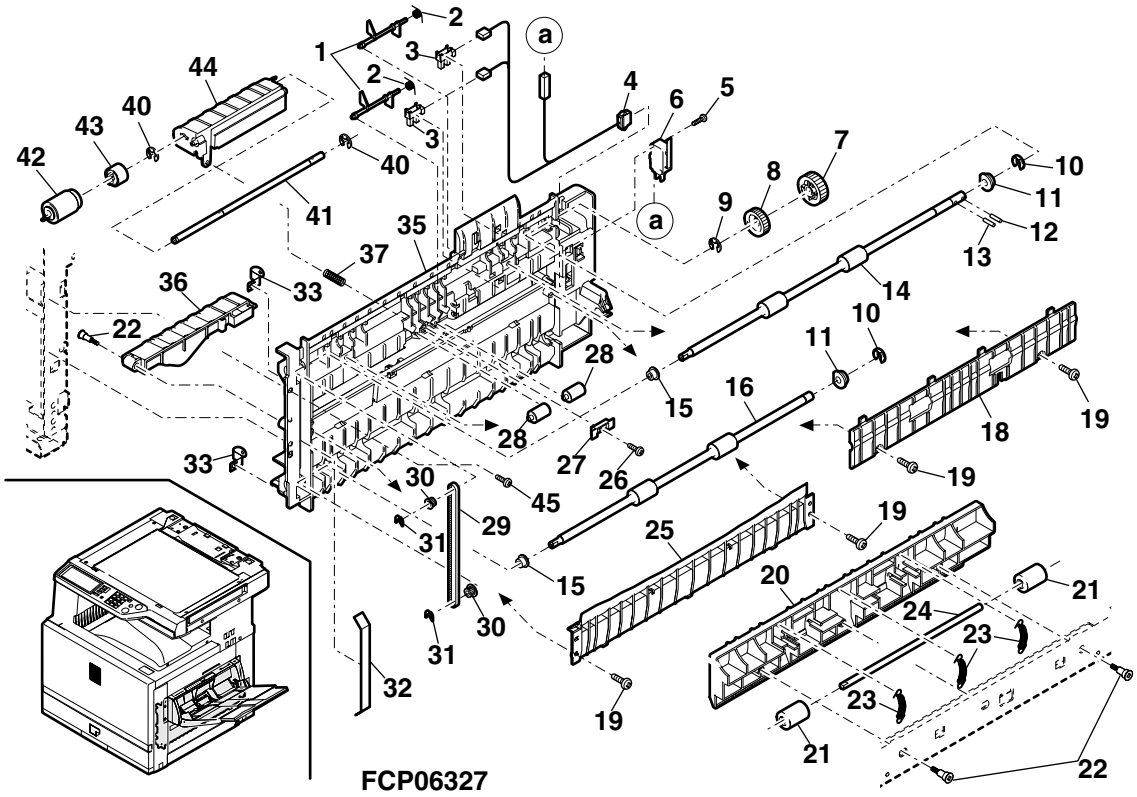

18 PS ﾕﾆｯﾄ (PS unit)

NO.	PARTS CODE	PRICE RANK Ex.	PRICE RANK Ja.	NEW MARK	PART RANK	DESCRIPTION	
1	NROLP1403FCZZ	AR	FQ	N	C	PS follow roller	PS 従動ﾛｰﾗ
2	NBRGP0604FCZZ	AD	DJ		C	Bearing	軸受け
3	XRESP70−08000	AA	DD		C	E type ring	E- ﾘﾝｸﾞ
4	NBLTH0373FCZZ	AF	DS	N	C	PS drive belt	PS 駆動ﾍﾞﾙﾄ
5	NPLYZ0352FCZZ	AE	DJ		C	PS drive pulley	PS 駆動ﾌﾟｰﾘｰ
6	NBRGP0682FCZZ	AC	DJ	N	C	Bearing	軸受け
7	LPiNS0096FCZZ	AB	DD		C	Pin(φ3-12)	ﾋﾟﾝ
8	MSPRC2731FCZ1	AC	DJ		C	PS pressure spring	PS 加圧ｽﾌﾟﾘﾝｸﾞ
9	NBRGP0626FCZZ	AC	DJ		C	Bearing(M8)	軸受け
10	NROLR1402FCZZ	AU	EZ	N	C	PS roller	PS ﾛｰﾗ
11	PSHEP4972FCZ1	AE	DS	N	C	PS front sheet A	PS 前ｼｰﾄ A
12	PGiDM1979FCZZ	AH	DX	N	C	PS front PG	PS 前ﾍﾟｰﾊﾟｰｶﾞｲﾄﾞ
13	DHAi−3342FCZZ	AE	DS	N	C	PPD2 harness	PPD2 ﾊｰﾈｽ
14	MLEVP0857FCZZ	AF	DJ	N	C	PS front actuator	PS 前ｱｸﾁｭｴｰﾀ
15	MSPRD3097FCZZ	AC	DJ	N	C	PS front actuator spring	PS 前ｱｸﾁｭｴｰﾀｽﾌﾟﾘﾝｸﾞ
16	LFRM−1076FCZZ	AN	EG	N	C	PS frame	PS ﾌﾚｰﾑ
17	XEBSD30P08000	AA	DD		C	Screw(3×8)	ﾋﾞｽ
18	CPWBF0083RS51	AU	EZ		E	Sensor PWB	ｾﾝｻｰ基板
19	PSHEP4985FCZ1	AE	DJ	N	C	PS front sheet B	PS 前ｼｰﾄ B
20	MSPRC3104FCZZ	AD	DJ	N	C	PS earth spring	PS ｱｰｽｽﾌﾟﾘﾝｸﾞ
	(Unit)						
901	CFRM−1076DS51	BD	GN	N	C	PS unit(Without No.4)	PS ﾕﾆｯﾄ (No.4 除く)

18 PS ﾕﾆｯﾄ (PS unit)

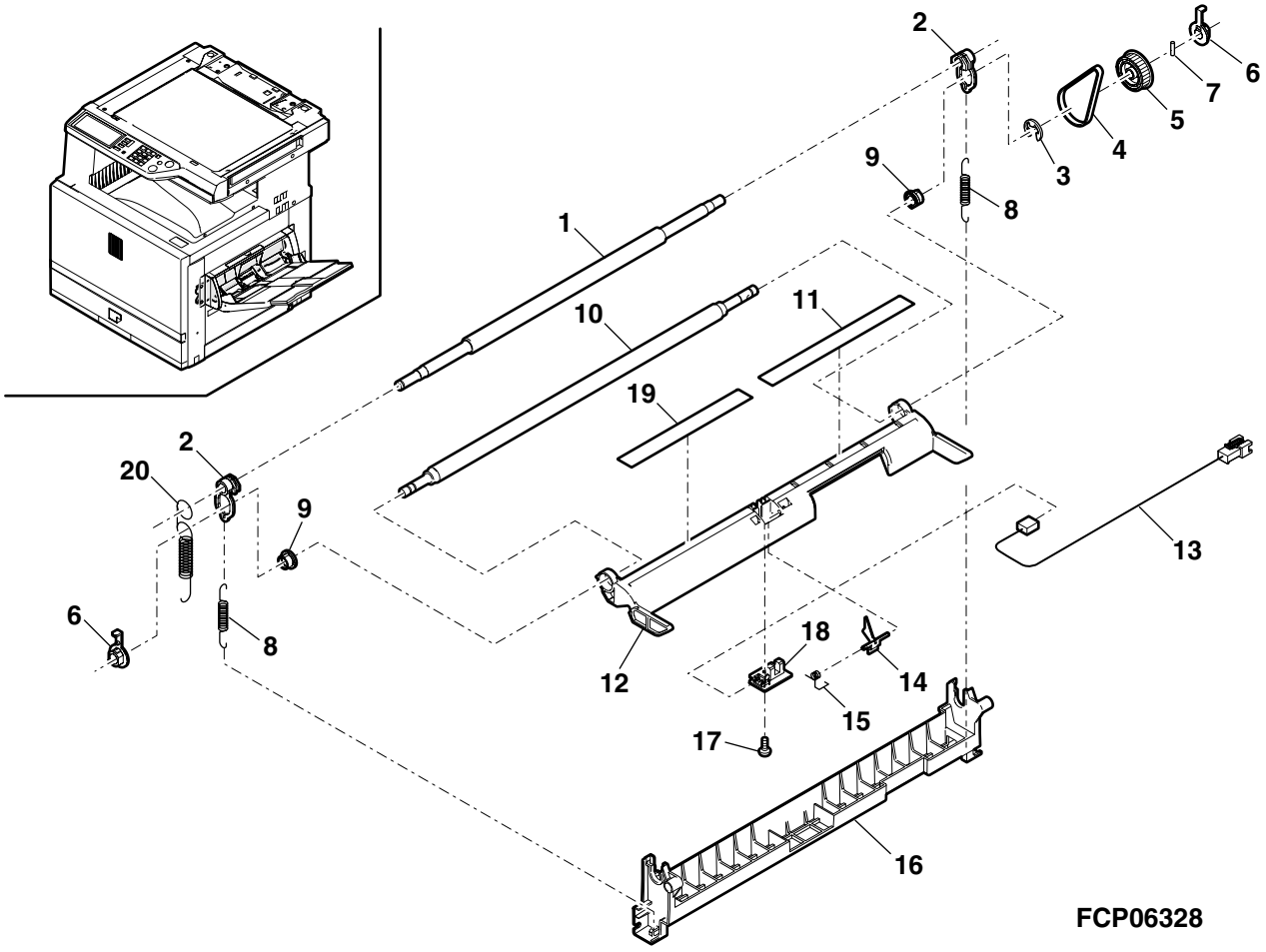

19 転写ﾍﾞﾙﾄﾕﾆｯﾄ 1(Transfer belt unit 1)

NO.	PARTS CODE	PRICE RANK Ex.	PRICE RANK Ja.	NEW MARK	PART RANK	DESCRIPTION	
1	PSHEZ4973FCZZ	AH	DX	N	B	Electric discharge sheet W	除電ｼｰﾄ W
2	NBRGP0677FCZZ	AC	DJ	N	B	Bearing	軸受け
3	NROLR1391FCZZ	AY	FQ	N	A	Transfer roller W	転写ﾛｰﾗ W
4	NBRGP0678FCZZ	AF	DS	N	B	Bearing	軸受け
5	NBRGP0675FCZZ	AH	DX	N	B	Bearing	軸受け
6	XRESP40−06000	AA	DD		C	E type ring	E- ﾘﾝｸﾞ
7	XRESP50−06000	AA	DD		C	E type ring	E- ﾘﾝｸﾞ
8	MSPRD3046FCZZ	AD	DJ	N	C	Transfer roller electrode C spring	転写ﾛｰﾗｰ電気 C ｽﾌﾟﾘﾝｸﾞ
9	MSPRC3047FCZZ	AB	DJ	N	C	Transfer roller pressure spring	転写ﾛｰﾗｰ加圧ｽﾌﾟﾘﾝｸﾞ
10	LFRM−1064FCZ1	AT	EZ	N	C	Belt frame	ﾍﾞﾙﾄﾊｳｼﾞﾝｸﾞ
13	LX−BZ0949FCZZ	AC	DD	N	C	Screw	ﾋﾞｽ
14	LPLTM5986FCZZ	AD	DJ	N	C	Housing fixing plate	ﾊｳｼﾞﾝｸﾞ取付けﾌﾟﾚｰﾄ
16	MSPRD3045FCZZ	AD	DJ	N	C	Transfer roller electrode k spring	転写ﾛｰﾗｰ電気 K ｽﾌﾟﾘﾝｸﾞ
17	CROLM1390FC01	AW	FG	N	B	Belt sub roller	ﾍﾞﾙﾄ従動ﾛｰﾗｰ
18	NSFTZ2690FCZ1	AL	EB	N	C	Belt sub roller shaft	ﾍﾞﾙﾄ従動ﾛｰﾗｼｬﾌﾄ
19	MSPRC3044FCZ1	AD	DJ	N	C	Belt tension spring	ﾍﾞﾙﾄﾃﾝｼｮﾝｽﾌﾟﾘﾝｸﾞ
20	NBRGP0676FCZ1	AC	DJ	N	C	Bearing	軸受け
22	QEARP0139FCZZ	AD	DJ	N	C	Belt earth plate J	ﾍﾞﾙﾄｱｰｽ板 J
23	XEBSD30P06000	AA	DD		C	Screw(3×6)	ﾋﾞｽ
24	NSFTZ2689FCZZ	AR	EQ	N	C	Belt idle shaft	ﾍﾞﾙﾄｱｲﾄﾞﾙｼｬﾌﾄ
25	QEARP0138FCZZ	AE	DJ	N	C	Belt earth plate K	ﾍﾞﾙﾄｱｰｽ板 K
26	LHLDZ1509FCZZ	AF	DS	N	C	Belt presure holder	ﾍﾞﾙﾄ加圧ﾎﾙﾀﾞｰ
27	MSPRC3109FCZZ	AC	DJ	N	C	Belt pressure spring	ﾍﾞﾙﾄ加圧ｽﾌﾟﾘﾝｸﾞ
28	XHBSD30P10000	AA	DD		C	Screw(3×10)	ﾋﾞｽ
29	LHLDZ1539FCZZ	AD	DJ	N	C	Belt holder	ﾍﾞﾙﾄﾎﾙﾀﾞ -
30	XEBSD30P08000	AA	DD		C	Screw(3×8)	ﾋﾞｽ
32	CROLM1404DS51	BB	GD	N	E	Belt drive roller unit	ﾍﾞﾙﾄ駆動ﾛｰﾗｰﾕﾆｯﾄ
34	PBRSR0222FCZZ	AK	DX	N	B	Belt CL brush	ﾍﾞﾙﾄ CL ﾌﾞﾗｼ
35	PBRSR0223FCZ1	AL	EB	N	B	Roller CL brush	ﾛｰﾗ CL ﾌﾞﾗｼ
36	PSHEP5087FCZZ	AC	DJ	N	C	Earth plate fixing sheet	ｱｰｽﾌﾟﾚｰﾄ押えｼｰﾄ
37	NBRGP0574FCZZ	AF	DS		C	Bearing	軸受け
38	LPLTM5714FCZZ	AB	DJ		C	M3 Plate	M3 ﾌﾟﾚｰﾄ
39	LX−BZ0965FCZZ	AE	DS	N	C	Screw	ﾋﾞｽ
40	PSHEZ5130FCZZ	AA	DJ	N	C	Plate fixing sheet	ﾌﾟﾚｰﾄ押さえｼｰﾄ
	(Unit)						
901	DUNT−7188DS11	CE	UF	N	A	Transfer belt unit(Include Block 20, Without No.39) 転写ﾍﾞﾙﾄﾕﾆｯﾄ (ﾌﾞﾛｯｸ 20 含む。No.39 除く)	(Japan)
901	DUNT−7188DS12	CE	UF	N	A	Transfer belt unit(Include Block 20, Without No.39) 転写ﾍﾞﾙﾄﾕﾆｯﾄ (ﾌﾞﾛｯｸ 20 含む。No.39 除く)	(Except Japan)

19 転写ﾍﾞﾙﾄﾕﾆｯﾄ 1(Transfer belt unit 1)

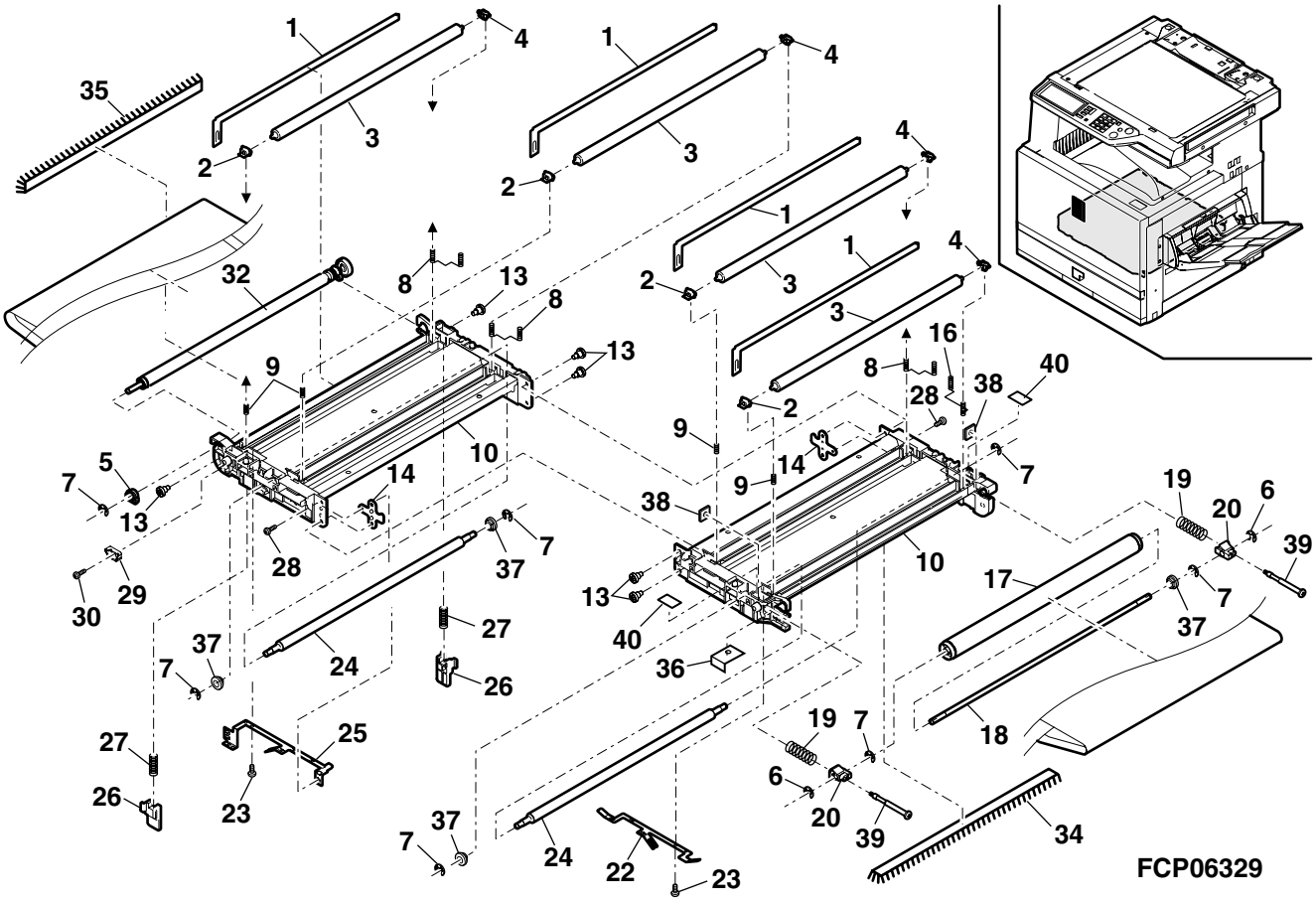

20 転写ﾍﾞﾙﾄﾕﾆｯﾄ 2(Transfer belt unit 2)

NO.	PARTS CODE	PRICE RANK Ex.	PRICE RANK Ja.	NEW MARK	PART RANK	DESCRIPTION	
1	VHPGP2TC21／／1	BE	GN		B	Pro con sensor(GP1A71L3)	ﾌﾟﾛｺﾝｾﾝｻｰ
2	XBBSD30P06000	AA	DD		C	Screw(3×6)	ﾋﾞｽ
3	DHAｉ−3414FC11	AL	EB	N	C	PCS harness	PCS ﾊｰﾈｽ
4	CPWBF1529DS51	AR	EQ	N	E	Pro con PWB	ﾌﾟﾛｺﾝ基板
5	PSEL−0853FCZZ	AC	DJ	N	C	Belt waste toner seal B	ﾍﾞﾙﾄ廃ﾄﾅｰｼｰﾙ B
6	UCLEZ0170FCZZ	AK	EB	N	A	Belt toner blade	ﾍﾞﾙﾄﾄﾅｰ受け
7	XEBSD30P06000	AA	DD		C	Screw(3×6)	ﾋﾞｽ
9	LPLTM5987FCZZ	AG	DX	N	C	Belt CL plate	ﾍﾞﾙﾄ CL ﾌﾟﾚｰﾄ
10	PSHEP4968FCZZ	AD	DJ	N	C	Belt waste toner transfer sheet	ﾍﾞﾙﾄ廃ﾄﾅｰ搬送ｼｰﾄ
11	XEBSD30P08000	AA	DD		C	Screw(3×8)	ﾋﾞｽ
12	UCLEZ0169FCZZ	AQ	EQ	N	A	Transfer blade	転写ﾌﾞﾚｰﾄﾞ
13	XHBSE30P08000	AA	DD		C	Screw(3×8)	ﾋﾞｽ
14	PSEL−0809FCZZ	AD	DJ	N	C	Waste toner cover seal	廃ﾄﾅｰｶﾊﾞｰｼｰﾙ
15	PCOVP1649FCZZ	AN	EG	N	C	Belt waste toner cover	ﾍﾞﾙﾄﾊｲｼﾄﾅｰｶﾊﾞｰ
16	PCAPH0009YSZZ	AC	DJ		C	TN cap	TN ｷｬｯﾌﾟ
17	MLEVP0843FCZ1	AC	DJ	N	C	Belt CL lever	ﾍﾞﾙﾄ CL ﾚﾊﾞｰ
18	MSPRT3049FCZZ	AC	DJ	N	C	Belt CL roller spring	ﾍﾞﾙﾄ CL ﾛｰﾗｽﾌﾟﾘﾝｸﾞ
19	NROLR1392FCZZ	BA	FX	N	A	Belt CL roller	ﾍﾞﾙﾄ CL ﾛｰﾗ
20	XRESP40−06000	AA	DD		C	E type ring	E-ﾘﾝｸﾞ
21	NGERH1500FCZZ	AD	DJ	N	B	Belt waste toner gear	ﾍﾞﾙﾄ廃ﾄﾅｰｷﾞｬ
22	PCLC−0318FCZZ	AC	DJ	N	B	Wastle toner detector clutch	排紙ﾄﾅｰ検知ｸﾗｯﾁ
23	MLEVP0865FCZZ	AC	DS	N	C	Delivery toner detector lever A	排紙ﾄﾅｰ検知ﾚﾊﾞｰ A
24	MSPRT2414FCZZ	AC	DJ		C	SW lower pawl spring	SW 下爪ｽﾌﾟﾘﾝｸﾞ
25	NBRGP0664FCZZ	AD	DJ		C	Bearing	軸受け
26	DHAｉ−3350FC11	AV	FG	N	C	Belt drawer harness	ﾍﾞﾙﾄﾄﾞﾛｱﾊｰﾈｽ
27	PCASZ0298FCZZ	AQ	EQ	N	C	Belt wastle toner transfer case	ﾍﾞﾙﾄ廃ﾄﾅｰ搬送ｹｰｽ
28	PMLT−1288FCZ1	AB	DJ	N	C	Belt wastle toner cushion A	ﾍﾞﾙﾄ排紙ﾄﾅｰﾓﾙﾄ A
30	PMLT−1287FCZZ	AB	DJ	N	C	Waste toner auger cushion	廃ﾄﾅｰｵｰｶﾞﾓﾙﾄ
31	NSFTZ2712FCZ1	AN	EG	N	C	Belt waste toner transfer shaft	ﾍﾞﾙﾄ廃ﾄﾅｰ搬送ｼｬﾌﾄ
32	XRESP50−06000	AA	DD		C	E type ring	E-ﾘﾝｸﾞ
33	LHLDZ1519FCZZ	AW	FG	N	C	Process control sensor holder	ﾌﾟﾛｺﾝｾﾝｻｰﾎﾙﾀﾞｰ
34	XBBSD30P04000	AA	DD		C	Screw(3×4)	ﾋﾞｽ
35	RPLU−0013QSZZ	AN	EG		B	Transport solenoid	搬送ｿﾚﾉｲﾄﾞ
36	XEBSD30P10000	AA	DD		C	Screw(3×10)	ﾋﾞｽ
37	LX−BZ0036GCZZ	AC	DD		C	Screw	ﾋﾞｽ
38	RMOTS0881FCZZ	BC	GD	N	B	Belt drive motor PM	ﾍﾞﾙﾄ駆動ﾓｰﾀ PM
39	CPLTM6011FC02	AS	EQ	N	C	Belt drive plate	ﾍﾞﾙﾄ駆動ﾌﾟﾚｰﾄ
40	XEBSD40P08000	AA	DD		C	Screw(4×8)	ﾋﾞｽ
41	TLABH4747FCZ1	AH	DX	N	C	Transfer belt caution label (Japan)	ﾃﾝｼｬﾍﾞﾙﾄﾁｭｳｲﾗﾍﾞﾙ
	TLABH4747FCZZ	AE	DJ	N	C	Transfer belt caution label (Except Japan)	ﾃﾝｼｬﾍﾞﾙﾄﾁｭｳｲﾗﾍﾞﾙ
42	XHBSD30P06000	AA	DD		C	Screw(3×6)	ﾋﾞｽ
43	LDAｉU0656FCZZ	AF	DS	N	C	Belt idle fixing base	ﾍﾞﾙﾄｱｲﾄﾞﾙ固定板
44	NGERH1499FCZZ	AG	DX	N	B	Belt idle gear	ﾍﾞﾙﾄｱｲﾄﾞﾙｷﾞｬ
45	LX−WZ2011SCZZ	AA	DD		C	Washer	ﾎﾟﾘｽﾗｲﾀﾞｰ
46	PSHT−0094FCZZ	AD	DJ	N	C	Process control shutter	ﾌﾟﾛｺﾝｼｬｯﾀｰ
47	PCOVP1648FCZ1	AE	DJ	N	C	Belt gear cover	ﾍﾞﾙﾄｷﾞｱｶﾊﾞｰ
48	MSPRT3165FCZZ	AC	DJ	N	C	Process control shutter spring	ﾌﾟﾛｺﾝｼｬｯﾀｰｽﾌﾟﾘﾝｸﾞ
49	QSW−B0017QSZZ	AF	DS	N	B	Tray detect switch	ｶｾｯﾄ検知ｽｲｯﾁ
50	TLABZ4772FCZ1	AF	DJ	N	B	Criterion label	基準ﾗﾍﾞﾙ
51	XEPSD30P08X00	AA	DD		C	Screw(3×8X)	ﾋﾞｽ
52	PSEL−0831FCZZ	AC	DJ	N	C	Belt waste toner seal A	ﾍﾞﾙﾄ廃ﾄﾅｰｼｰﾙ A
53	PSEL−0832FCZZ	AC	DJ	N	C	Belt waste toner seal B	ﾍﾞﾙﾄ廃ﾄﾅｰｼｰﾙ B
54	PSEL−0855FCZZ	AA	DJ	N	C	Belt waste toner seal D	ﾍﾞﾙﾄ廃ﾄﾅｰｼｰﾙ D
55	PSEL−0854FCZZ	AA	DJ	N	C	Belt waste toner seal C	ﾍﾞﾙﾄ廃ﾄﾅｰｼｰﾙ C
56	PSHEP5076FCZZ	AC	DJ	N	C	Harnes fixing sheet	ﾊｰﾈｽ押えｼｰﾄ
57	PSHEZ4974FCZZ	AC	DJ	N	B	Belt cushion	ﾍﾞﾙﾄﾓｹｯﾄ
60	MSPRC3106FCZZ	AC	DJ	N	C	Waste toner detector clutch spring	廃ﾄﾅｰ検知ｸﾗｯﾁｽﾌﾟﾘﾝｸﾞ
61	LX−WZ0445FCZ1	AC	DD	N	C	Washer	ﾎﾟﾘｽﾗｲﾀﾞｰ
62	TCADZ1595FCZZ	AC	DJ	N	C	Transfer belt fixing release manual	転写ﾍﾞﾙﾄ固定解除手順書
63	PSHEZ5126FCZZ	AF	DS	N	C	Blade protect sheet	ﾌﾞﾚｰﾄﾞ保護ｼｰﾄ
501	CCASZ0298DS52	BK	HG	N	A	Belt wastle toner unit	ﾍﾞﾙﾄﾊｲﾄﾅｰﾕﾆｯﾄ
	(Unit)						
901	DUNT−7188DS11	CE	UF	N	A	Transfer belt unit(Include Block 19、Without No.62,63) 転写ﾍﾞﾙﾄﾕﾆｯﾄ(ﾌﾞﾛｯｸ 19 含む。No.62,63 除く)	(Japan)
901	DUNT−7188DS12	CE	UF	N	A	Transfer belt unit(Include Block 19、Without No.62,63) 転写ﾍﾞﾙﾄﾕﾆｯﾄ(ﾌﾞﾛｯｸ 19 含む。No.62,63 除く)	(Except Japan)

21 転写ﾘﾌﾄｱｯﾌﾟﾕﾆｯﾄ (Transfer lift-up unit)

NO.	PARTS CODE	PRICE RANK Ex.	PRICE RANK Ja.	NEW MARK	PART RANK	DESCRIPTION	
1	NSFTZ2691FCZZ	AU	EZ	N	C	Belt lift-up cam shaft	ﾍﾞﾙﾄﾘﾌﾄｱｯﾌﾟｶﾑｼｬﾌﾄ
2	XRESP70−08000	AA	DD		C	E type ring	E-ﾘﾝｸﾞ
3	LPLTP6098FCZZ	AD	DJ	N	C	Belt lift-up detector plate	ﾍﾞﾙﾄﾘﾌﾄｱｯﾌﾟ検知ﾌﾟﾚｰﾄ
4	MCAMP0106FCZZ	AC	DJ	N	C	Belt lift-up cam	ﾍﾞﾙﾄﾘﾌﾄｱｯﾌﾟｶﾑ
5	LPｉNS0096FCZZ	AB	DD		C	Pin(φ3-12)	ﾋﾟﾝ
6	CFRM−1066FC02	AK	EB	N	C	Belt lift up frame F	ﾍﾞﾙﾄﾘﾌﾄｱｯﾌﾟﾌﾚｰﾑ F
7	NSFTZ2730FCZZ	AK	EB	N	C	Belt brake shaft	ﾍﾞﾙﾄﾌﾞﾚｰｷｼｬﾌﾄ
8	NGERH1525FCZZ	AD	DJ	N	C	Belt brake gear	ﾍﾞﾙﾄﾌﾞﾚｰｷｷﾞｬ
9	LX−WZ0445FCZ1	AC	DD	N	C	Washer(M16)	ﾎﾟﾘｽﾗｲﾀﾞｰ
10	MSPRC3077FCZ1	AC	DJ	N	C	Belt lift-up spring	ﾍﾞﾙﾄﾘﾌﾄｱｯﾌﾟｽﾌﾟﾘﾝｸﾞ

21 転写ﾘﾌﾄｱｯﾌﾟ ﾕﾆｯﾄ (Transfer lift-up unit)

NO.	PARTS CODE	PRICE RANK Ex.	PRICE RANK Ja.	NEW MARK	PART RANK	DESCRIPTION	
11	XWHSD30−08100	AA	DD		C	Washer	ﾋﾗ ﾜｯｼｬ
12	LX−BZ0916FCZZ	AA	DD		C	Screw	ﾋﾞｽ
13	NBRGC0319FCZ1	AC	DJ		C	Bearing	軸受け
14	PCLR−0474FCZZ	AC	DJ	N	C	Belt lift-up collar	ﾍﾞﾙﾄﾘﾌﾄｱｯﾌﾟｶﾗｰ
15	XHBSD30P06000	AA	DD		C	Screw(3×6)	ﾋﾞｽ
16	XRESP40−06000	AA	DD		C	E type ring	E- ﾘﾝｸﾞ
17	NGERH1504FCZZ	AD	DJ	N	C	Waste toner idle gear(42T)	廃ﾄﾅｰｱｲﾄﾞﾙｷﾞｬ
18	CARMM0286FC01	AG	DX	N	C	Wastle toner gear arm	ﾊｲﾄﾅｰｷﾞｬｱｰﾑ
19	NGERH1503FCZZ	AC	DJ	N	C	Lift-up gear(12/24T)	ﾘﾌﾄｱｯﾌﾟｷﾞｬ
20	MSPRT3050FCZZ	AC	DJ	N	C	Wastle toner gear aem spring	廃ﾄﾅｰｷﾞｱｱｰﾑｽﾌﾟﾘﾝｸﾞ
21	CFRM−1066FC01	AQ	EQ	N	C	Belt lift up frame R	ﾍﾞﾙﾄﾘﾌﾄｱｯﾌﾟﾌﾚｰﾑ R
22	NGERH1505FCZZ	AD	DJ	N	C	Waste toner idle gear(12/18T)	廃ﾄﾅｰｱｲﾄﾞﾙｷﾞｬ
23	NGERH1502FCZZ	AD	DJ	N	C	Lift-up gear(16/36T)	ﾘﾌﾄｱｯﾌﾟｷﾞｬ
24	NGERH1501FCZZ	AK	EB	N	B	Belt lift-up gear(44T)	ﾍﾞﾙﾄﾘﾌﾄｱｯﾌﾟｷﾞｬ
25	VHPGP1A71L3−1	AG	DS	N	B	Photo sensor(GP1A71L3)	ﾌｫﾄｾﾝｻｰ
26	DHAi−3344FCZZ	AF	DS	N	C	BLUD harness	BLUD ﾊｰﾈｽ
27	PSHEP4986FCZZ	AC	DJ	N	C	Lift-up edge protect sheet	ﾘﾌﾄｱｯﾌﾟｴｯｼﾞ保護ｼｰﾄ
28	LSTYM0293FCZZ	AP	EQ	N	C	Belt lift-UP stay	ﾍﾞﾙﾄﾘﾌﾄｱｯﾌﾟｽﾃｰ
29	RMOTS0882FCZZ	BA	FX	N	B	Belt lift up motor	ﾍﾞﾙﾄﾘﾌﾄｱｯﾌﾟﾓｰﾀ

20 転写ﾍﾞﾙﾄﾕﾆｯﾄ 2(Transfer belt unit 2)

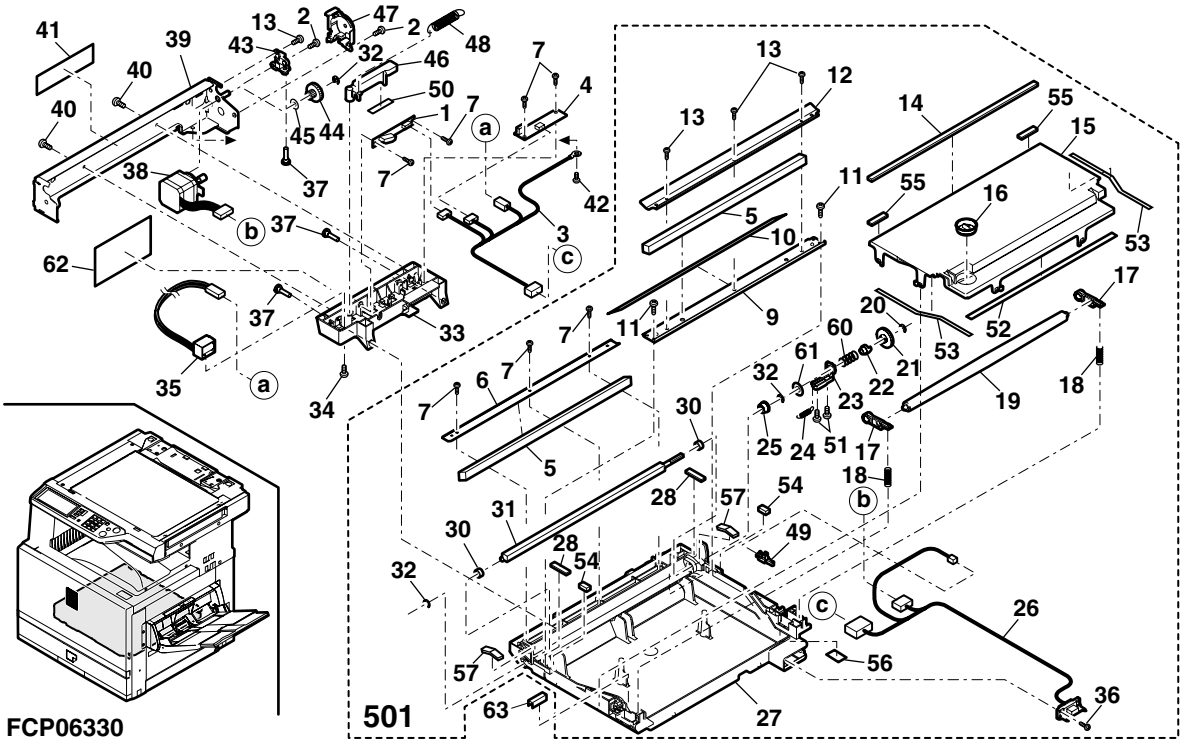

21 転写ﾘﾌﾄｱｯﾌﾟ ﾕﾆｯﾄ (Transfer lift-up unit)

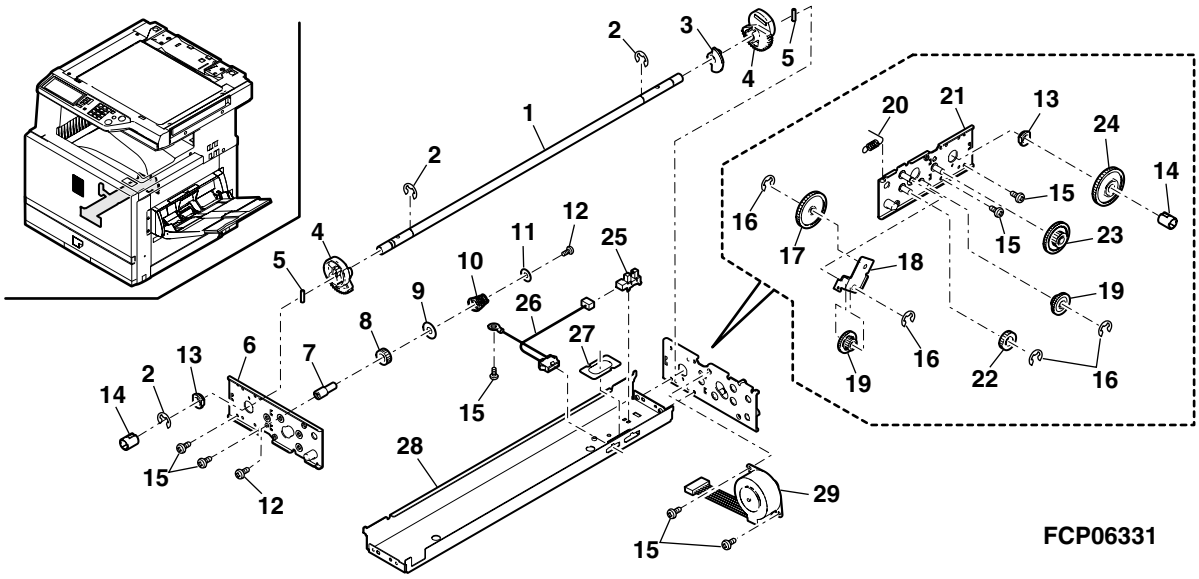

22 ﾌﾟﾛｾｽﾕﾆｯﾄ (Process unit)

NO.	PARTS CODE	PRICE RANK Ex.	PRICE RANK Ja.	NEW MARK	PART RANK	DESCRIPTION	
1	XBBS230P08000	AA	DD		C	Screw(3×8)	ﾋﾞｽ
2	CFRM-1084DS51	AR	EQ	N	E	MC frame unit	MC ﾌﾚｰﾑﾕﾆｯﾄ
3	TLABZ4766FCZ1	AC	DJ	N	C	ARW-label-BK	ARW ﾗﾍﾞﾙ BK
4	CCASZ0302DS51	BB	GD	N	A	MC unit	MC ﾕﾆｯﾄ
5	PSHEP5062FCZZ	AB	DJ	N	C	RFL sheet	RFL ｼｰﾄ
6	PLNS-0076FCZZ	AL	EB	N	B	DCH Lens	DCH ﾚﾝｽﾞ
7	LPLTM5714FCZZ	AB	DJ		C	M3 plate	M3 ﾌﾟﾚｰﾄ
8	PSHEZ5027FCZZ	AB	DJ	N	B	Cleaning sheet	ｸﾘｰﾆﾝｸﾞｼｰﾄ
9	NGERH1529FCZZ	AC	DJ	N	C	WTN-gear-21T(21T)	ｷﾞｬ
10	CFRM-1083DS72	AQ	EQ	N	E	Process frame unit	ﾌﾟﾛｾｽﾌﾚｰﾑﾕﾆｯﾄ
11	PSHEZ4997FCZ1	AC	DJ	N	A	Side sheet F	ｻｲﾄﾞｼｰﾄ F
12	PSHEZ4998FCZ1	AB	DJ	N	A	Side sheet R	ｻｲﾄﾞｼｰﾄ R
13	PSHEP5061FCZ1	AD	DJ	N	C	BLC sheet	BLC ｼｰﾄ
14	UCLEZ0171FCZ2	AX	FG	N	A	Cleaner blade	ｸﾘｰﾅｰﾌﾞﾚｰﾄﾞ
15	PSHEP5089FCZZ	AA	DJ	N	C	Blade side sheet	ﾌﾞﾚｰﾄﾞｻｲﾄﾞｼｰﾄ
16	CSFTZ2716DS51	AP	EQ	N	C	Drum shaft	ﾄﾞﾗﾑｼｬﾌﾄ
17	XEBSD30P08000	AA	DD		C	Screw(3×8)	ﾋﾞｽ
18	UCLEZ0172FCZ1	AQ	EQ	N	A	WTN cleaner seel	WTN ｸﾘｰﾅｰｼｰﾙ
19	QEARP0140FCZZ	AD	DJ	N	C	GND earth CL	GND-ｱｰｽ-CL
20	NBRGP0688FCZ1	AD	DJ	N	C	Bearing	軸受け
21	LSTPP0011QSZZ	AC	DJ		C	Stopper	ｽﾄｯﾊﾟｰ
22	XEBSD40P10000	AA	DD		C	Screw(3×10)	ﾋﾞｽ
23	TLABZ4753FCZZ	AA	DJ	N	C	Color label Y	ｶﾗｰﾗﾍﾞﾙ Y
	TLABZ4754FCZZ	AA	DJ	N	C	Color label M	ｶﾗｰﾗﾍﾞﾙ M
	TLABZ4755FCZZ	AA	DJ	N	C	Color label C	ｶﾗｰﾗﾍﾞﾙ C
	TLABZ4756FCZZ	AB	DJ	N	C	Color label BK	ｶﾗｰﾗﾍﾞﾙ BK
24	JHNDP0167FCZ2	AC	DJ	N	C	MC cleaner handle	MC CLE ﾊﾝﾄﾞﾙ
25	NSFTZ2736FCZZ	AP	EQ	N	C	MC cleaner shaft	MC ｸﾘｰﾅｰｼｬﾌﾄ
26	PMLT-1312FCZZ	AB	DJ	N	C	Cleaner cushion	ｸﾘｰﾅｰﾓﾙﾄ
27	LPLTM6112FCZZ	AH	DX	N	C	Process frame RFC	ﾌﾟﾛｾｽﾌﾚｰﾑ RFC
28	NBRGP0687FCZZ	AG	DS	N	C	Bearing	軸受け
29	PSEL-0829FCZ1	AC	DJ	N	C	Blade seal	ﾌﾞﾚｰﾄﾞｼｰﾙ
30	PSHEZ5099FCZ1	AC	DJ	N	C	DCT sheet	DCT ｼｰﾄ
31	PSEL-0835FCZ1	AC	DJ	N	C	Drop seal	ﾄﾞﾛｯﾌﾟｼｰﾙ
32	PSEL-0864FCZZ	AD	DJ	N	C	Drop seal BRS	ﾄﾞﾛｯﾌﾟｼｰﾙ BRS
33	PSEL-0830FCZZ	AA	DJ	N	C	STP seal PIP	STP ｼｰﾙ PIP
34	PSEL-0866FCZZ	AB	DJ	N	C	PIP seal TOP	PIP ｼｰﾙ TOP
35	PSHEP5121FCZZ	AA	DJ	N	C	RING sheet PIP	RING ｼｰﾄ PIP
	(Unit)						
901	CFRM-1083DS51	BK	HC	N	E	Process unit(Without No.3,16,21,23) (U.S.A Other countries)	ﾌﾟﾛｾｽﾕﾆｯﾄ (No.3,16,21,23 除く)
	CFRM-1083DS52	BH	HC	N	E	Process unit(Without No.3,16,21,23) (Japan,Europe,Australia,New Zealand)	ﾌﾟﾛｾｽﾕﾆｯﾄ (No.3,16,21,23 除く)

22 ﾌﾟﾛｾｽﾕﾆｯﾄ (Process unit)

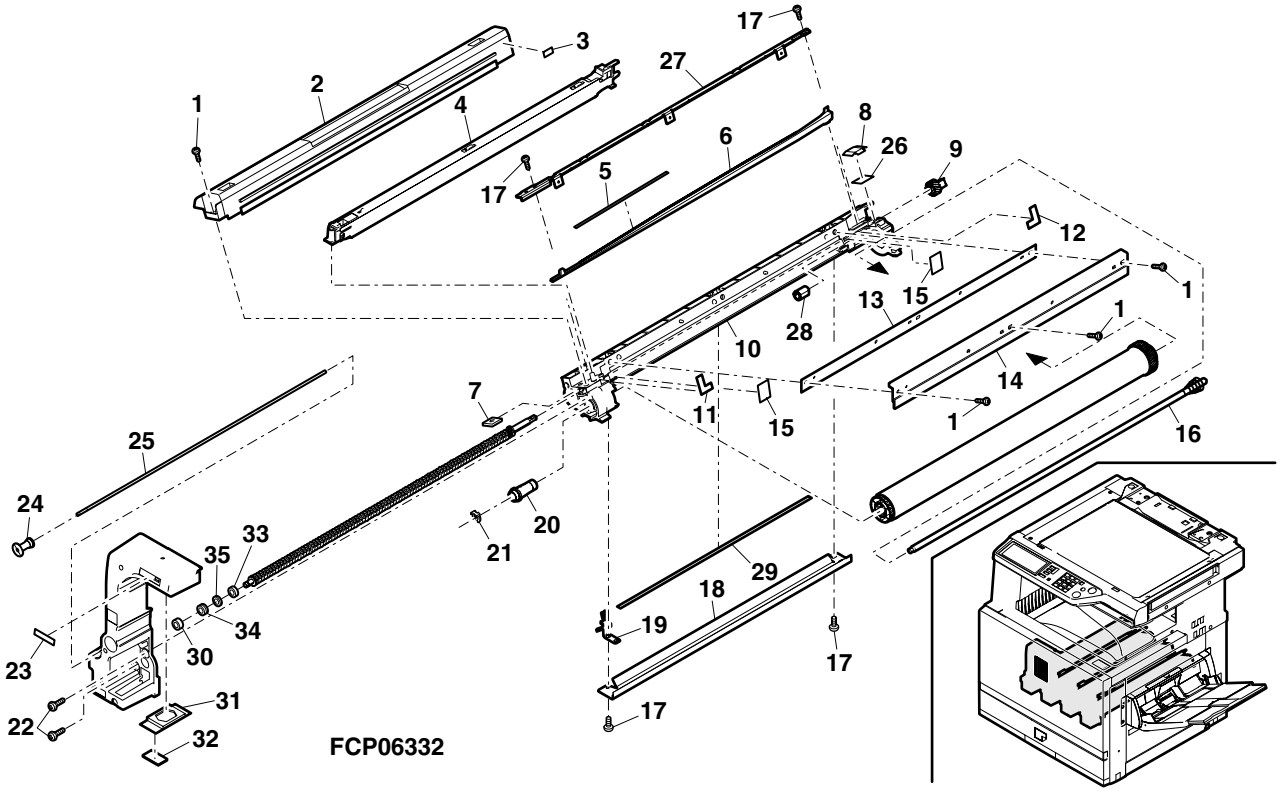

23 ﾄﾞﾗﾑ駆動ﾕﾆｯﾄ (Drum drive unit)

NO.	PARTS CODE	PRICE RANK Ex.	PRICE RANK Ja.	NEW MARK	PART RANK	DESCRIPTION	
1	DHAｉ－３３５１FCZZ	AD	DJ	N	C	MC CMY harness	MC CMY ﾊｰﾈｽ
2	DHAｉ－３３４９FCZZ	AD	DJ	N	C	Drive interface high voltage harness	駆動間高圧ﾊｰﾈｽ
3	XHBSD３０P０６０００	AA	DD		C	Screw(3×6)	ﾋﾞｽ
4	DHAｉ－３３６５FCZZ	AH	DX	N	C	TES harness	TES ﾊｰﾈｽ
5	LFRM－１０６２FCZZ	AP	EQ	N	C	DR drive frame T	DR 駆動ﾌﾚｰﾑ T
6	NBRGC０６７２FCZZ	AE	DJ	N	C	Bearing	軸受け
7	XEBSD４０P０８０００	AA	DD		C	Screw(4×8)	ﾋﾞｽ
8	LHLDW１１５５FCZZ	AC	DJ		C	Wire holder(LWS3S2W)	ﾎﾙﾀﾞｰ
9	MSPRP３０３８FCZZ	AC	DJ	N	C	Drive shaft electrode spring	駆動軸ｱｰｽｽﾌﾟﾘﾝｸﾞ
10	RMOTS０８７９FCZZ	BD	GN	N	B	Drum drive motor	ﾄﾞﾗﾑ駆動ﾓｰﾀ
11	LANGT１４１１FCZZ	AD	DJ	N	C	Drive PWB fixing angle	ﾄﾞﾗｲﾌﾞ基板取付けｱﾝｸﾞﾙ
12	CFRM－１０６１DS７１	AV	FG	N	E	DR drive frame B sub	DR 駆動ﾌﾚｰﾑ B ｻﾌﾞ
13	PRNGP０１１０FCZZ	AA	DJ	N	C	Ring	ﾘﾝｸﾞ
14	NCPL－００５６FCZZ	AF	DS	N	B	Drum joint cupling	ﾄﾞﾗﾑ連結ｶｯﾌﾟﾘﾝｸﾞ
15	VHPGP１A７１L３－１	AG	DS	N	B	Photo sensor(GP1A71L3)	ﾌｫﾄｾﾝｻｰ
16	MLEVP０８４２FCZZ	AE	DS	N	C	Enpty detector lever	満杯検知ﾚﾊﾞｰ
18	XRESP８０－０８０００	AA	DD		C	E type ring	E- ﾘﾝｸﾞ
19	LPｉNS００９６FCZZ	AB	DD		C	Pin(φ3-12)	ﾋﾟﾝ
21	CSFTZ２６８６DS５１	AV	FG	N	E	DR drive shaft	DR 駆動ｼｬﾌﾄ
22	MSPRD３０４２FCZZ	AD	DJ	N	C	DV electrode spring	DV 接点ｽﾌﾟﾘﾝｸﾞ
23	MSPRD３０４１FCZZ	AD	DJ	N	C	GB electrode spring	GB 接点ｽﾌﾟﾘﾝｸﾞ
24	LPLTM６００３FCZZ	AD	DJ	N	C	MC joint terminal plate	MC 接続端子ﾌﾟﾚｰﾄ
25	MSPRD３０４０FCZZ	AC	DJ	N	C	MC electrode spring	MC 接点ｽﾌﾟﾘﾝｸﾞ
27	CPWBF１５２６DS５１	AP	EQ	N	C	LED DL PWB	LED DL 基板
28	XHBSE４０P０８０００	AA	DD		C	Screw(4×8)	ﾋﾞｽ
29	RMOTS０８７９FCNA	BD	GN	N	B	Drum drive motor BK	ﾄﾞﾗﾑ駆動ﾓｰﾀ BK
30	LHLDW１０６１FCZZ	AB	DD		C	Holder(HL-18-0)	ﾎﾙﾀﾞｰ
	(Unit)						
901	DUNT－７２５１DSZZ	BZ	TF	N	E	Drum drive unit(Without No.4,11,28)	ﾄﾞﾗﾑ駆動ﾕﾆｯﾄ(No.4,11,28除く)

23 ﾄﾞﾗﾑ駆動ﾕﾆｯﾄ (Drum drive unit)

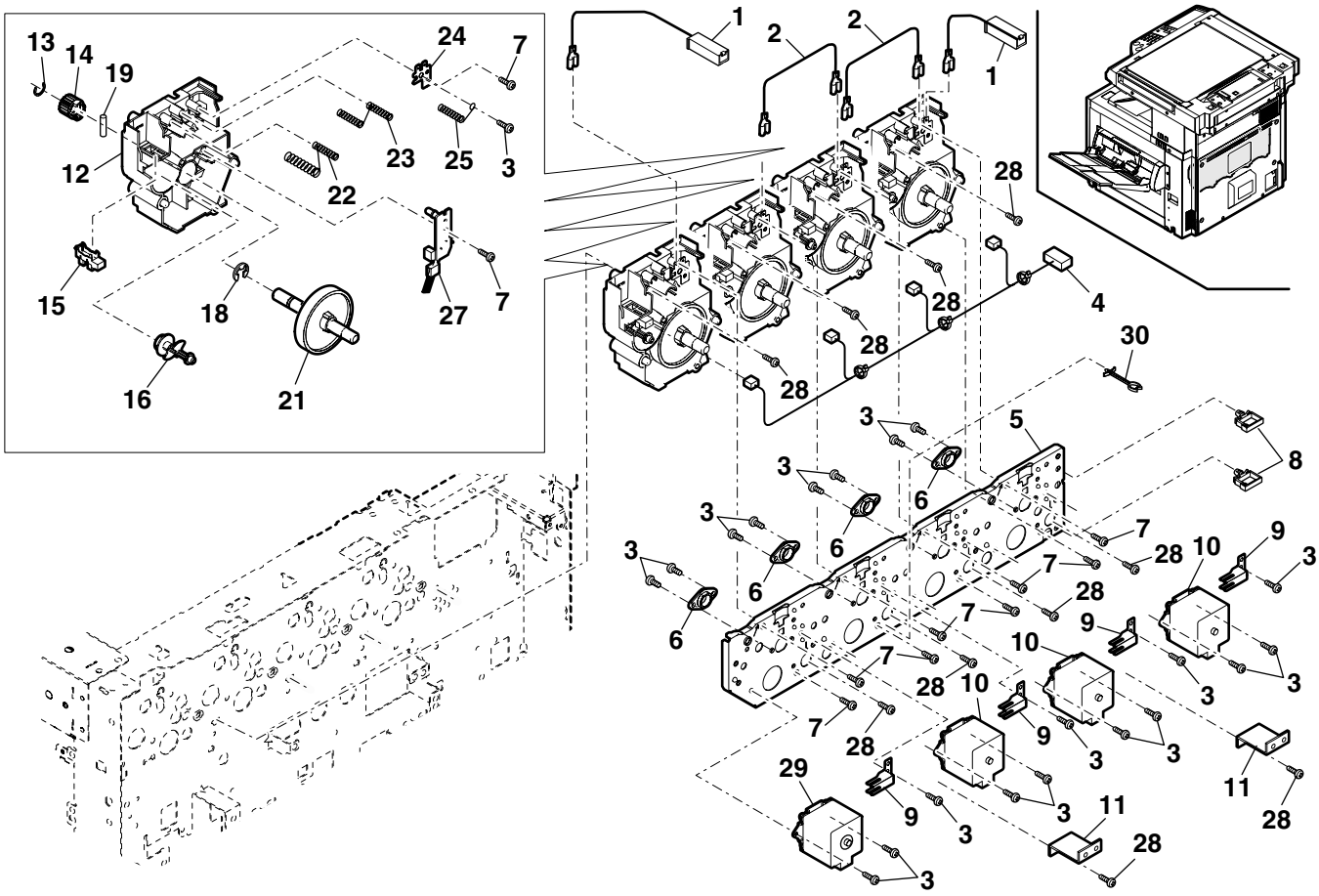

FCP06333

24 定着ﾕﾆｯﾄ 1(Fusing unit 1)

NO.	PARTS CODE	PRICE RANK Ex.	PRICE RANK Ja.	NEW MARK	PART RANK	DESCRIPTION		
1	PCOVP1650FCZZ	AT	DX	N	C	Harness cover		ﾊｰﾈｽｶﾊﾞｰ
2	TLABH4746FCZZ	AH	DX	N	C	Hiht temperature caution label		高温注意ﾗﾍﾞﾙ
3	XHBS230P12000	AA	DD		C	Screw(3×8)		ﾋﾞｽ
4	XEBSD30P12000	AA	DD		C	Screw(3×12)		ﾋﾞｽ
5	MLEVP0875FCZZ	AF	DS	N	C	Fusing Open/Shut lever		定着開閉ﾚﾊﾞｰ
6	LX-WZ0443FCZZ	AB	DD		C	Washer		ｱｰｽ用ﾋﾗﾜｯｼｬｰ
7	MARMP0301FCZ1	AE	DJ	N	C	Holder rotation arm		ﾎﾙﾀﾞｰ回転ｱｰﾑ
8	LHLDR1511FCZ1	BA	FX	N	C	Roller holder		ﾛｰﾗｰﾎﾙﾀﾞｰ
9	MSPRP3056FCZZ	AF	DS	N	C	Delivery roller spring		排紙ｺﾛ板ﾊﾞﾈ
10	PCLR-0475FCZZ	AA	DJ	N	C	Delivery collar		排紙ｺﾛ
11	PCOVP1636FCZ1	AW	EZ	N	C	Fusing enter cover		定着入紙ｶﾊﾞｰ
12	MSPRP3052FCZZ	AG	DS	N	C	Lamp electrode spring A		ﾗﾝﾌﾟ電極 A ｽﾌﾟﾘﾝｸﾞ
13	DHAi-3353FCZZ	AY	FQ	N	C	Fusing upper harness	(100V Series)	定着上ﾊｰﾈｽ
	DHAi-3399FCZZ	AY	FQ	N	C	Fusing upper harness	(200V Series)	定着上ﾊｰﾈｽ
14	XEBSD30P06000	AA	DD		C	Screw(3×6)		ﾋﾞｽ
15	XBPSD30P06KS0	AA	DD		C	Screw(3×6KS)		ﾋﾞｽ
17	XHBS230P06000	AA	DD		C	Screw(3×6)		ﾋﾞｽ
18	PCOVP1637FCZZ	AN	EQ	N	C	Fusing fromt cover		定着前ｶﾊﾞｰ
19	XHBSD30P06000	AA	DD		C	Screw(3×6)		ﾋﾞｽ
20	LX-BZ0736FCZZ	AB	DD		C	Screw		DV 駆動ﾀﾞﾝﾋﾞｽ
21	LFRM-1069FCZZ	AL	EB	N	C	Fusing upper frame F		定着上ﾌﾚｰﾑ F
22	LHLDZ1513FCZZ	AD	DJ	N	C	Lamp holder F		ﾗﾝﾌﾟﾎﾙﾀﾞｰ F
24	MSPRC3059FCZZ	AC	DJ	N	C	HR fixing spring		HR 固定ｽﾌﾟﾘﾝｸﾞ
26	LPLTM5996FCZ1	AN	EG	N	C	Thermostat fixing plate		ｻｰﾓｽﾀｯﾄ取付けﾌﾟﾚｰﾄ
27	RTHM-0022FCZZ	AN	EG		B	Thermostat(100V Only)		ｻｰﾓｽﾀｯﾄ
	CTHM-0011FC01	AK	EB		B	Thermostat(Other)		ｻｰﾓｽﾀｯﾄ
28	XWHSD30-05080	AA	DD		C	Washer		ﾋﾗ ﾜｯｼｬ
29	XHBSD30P04000	AA	DD		C	Screw(3×4)		ﾋﾞｽ
30	RDTCT0153FCZZ	AN	EQ	N	B	Thermistor		ｻｰﾐｽﾀｰ
31	XHBSD30P10000	AA	DD		C	Screw(3×10)		ﾋﾞｽ
32	CFRM-1070FC01	AP	EQ	N	C	Fusing upper frame R		定着上ﾌﾚｰﾑ R
33	NGERH1062FCZZ	AE	DS		B	DV idle gear(25T)		DV ｱｲﾄﾞﾙｷﾞｬ
34	NGERH0780FCZ1	AE	DS		B	Fusing idle gear(26TN)		定着ｱｲﾄﾞﾙｷﾞｬ
35	XRESP70-08000	AA	DD		C	E type ring		E-ﾘﾝｸﾞ
36	LHLDZ1512FCZZ	AR	EQ	N	C	Lamp holder R		ﾗﾝﾌﾟﾎﾙﾀﾞｰ R
37	NROLR1395FCZZ	BN	HZ	N	A	Upper heat roller		上ﾋｰﾄﾛｰﾗ
38	NBRGY0646FCZZ	AS	EQ		B	Bearing		ﾍﾞｱﾘﾝｸﾞ
39	NGERH1507FCZZ	AT	EZ	N	B	Fusing gear(60TWH)		定着ｷﾞｬ
40	LSTPF0172FCZ1	AA	DJ		C	Roller stopper		ﾛｰﾗｰｽﾄｯﾊﾟｰ
⚠ 41	RLMPU0672FCZZ	BA	FX	N	B	Upper heater lamp	(100V)	上ﾋｰﾀｰﾗﾝﾌﾟ
⚠	RLMPU0668FCZZ	BA	FX	N	B	Upper heater lamp	(120V)	上ﾋｰﾀｰﾗﾝﾌﾟ
⚠	RLMPU0669FCZZ	BA	FX	N	B	Upper heater lamp	(200V)	上ﾋｰﾀｰﾗﾝﾌﾟ
43	LPLTM6109FCZZ	AD	DJ	N	C	Separator pawl plate	(Japan only)	剥離爪ﾌﾟﾚｰﾄ
44	PTME-0276FCZ1	AK	EB		A	Separator pawl	(Japan only)	剥離爪
45	MSPRT2414FCZZ	AC	DJ		B	Separator pawl spring	(Japan only)	剥離爪ｽﾌﾟﾘﾝｸﾞ
46	XHBSD30P06000	AA	DD		C	Screw(3×6)	(Japan only)	ﾋﾞｽ
47	XHBS240P08000	AB	DD		C	Screw(4×8S)		ﾋﾞｽ
48	PBRSR0224FCZZ	AH	DX	N	B	Fusing discharge brush		定着除電ﾌﾞﾗｼ
49	MSPRC3160FCZZ	AC	DJ	N	C	Open/Shut presure spring		開閉圧接ｽﾌﾟﾘﾝｸﾞ
50	MSPRT3190FCZZ	AF	DS	N	C	Discharge presure spring		除電圧接ｽﾌﾟﾘﾝｸﾞ
51	LX-BZ3006SC0S	AA	DD		C	Screw(3×6)		ﾋﾞｽ
52	CPLTM6109DS51	AP	EQ		E	Separator pawl plate unit	(Japan only)	剥離爪ﾌﾟﾚｰﾄﾕﾆｯﾄ
	(Unit)							
⚠ 901	DUNTW7189DSZZ	CG	UM	N	E	Fusing unit(Include Block 25)	(100V Series)	定着ﾕﾆｯﾄ(ﾌﾞﾛｯｸ 25 含む)
⚠	DUNTW7189DS11	CG	UM	N	E	Fusing unit(Include Block 25)	(120V Series)	定着ﾕﾆｯﾄ(ﾌﾞﾛｯｸ 25 含む)
⚠	DUNTW7189DS12	CG	UM	N	E	Fusing unit(Include Block 25)	(200V Series)	定着ﾕﾆｯﾄ(ﾌﾞﾛｯｸ 25 含む)

24 定着ﾕﾆｯﾄ 1(Fusing unit 1)

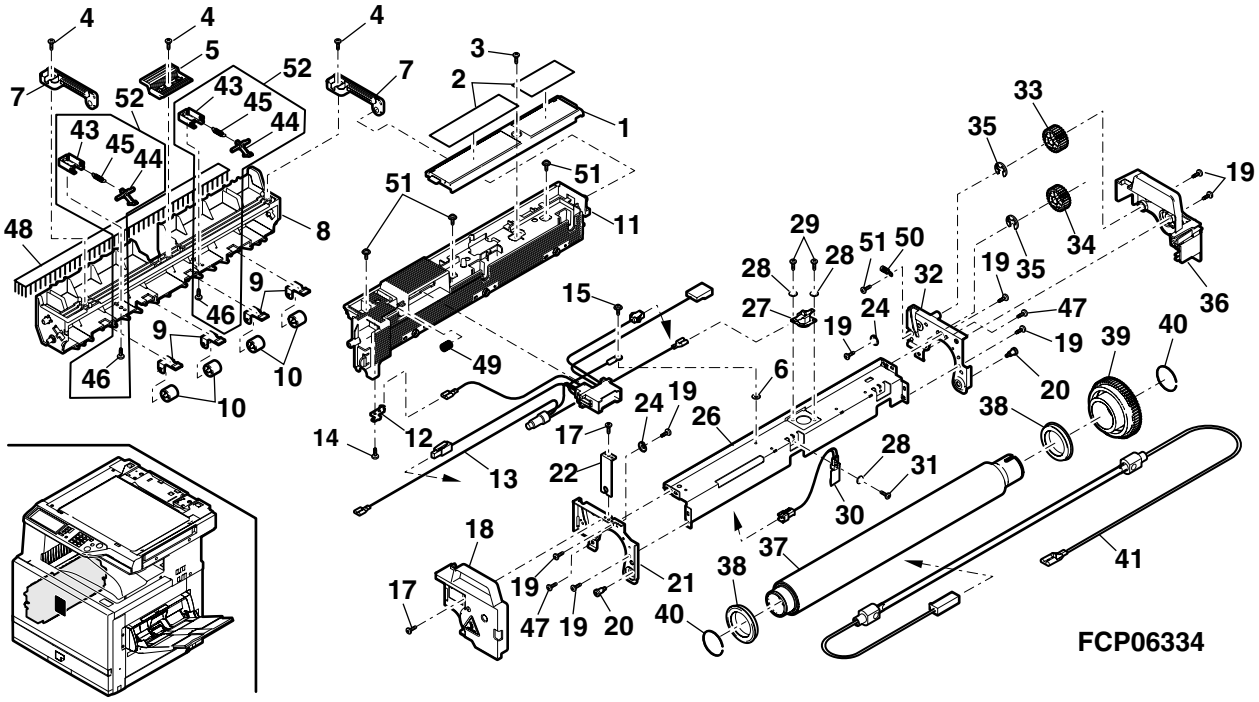

25 定着ﾕﾆｯﾄ 2(Fusing unit 2)

NO.	PARTS CODE	PRICE RANK Ex.	PRICE RANK Ja.	NEW MARK	PART RANK	DESCRIPTION	
1	NROLR1394FCZ1	AT	EZ	N	C	Delivery roller	排紙ﾛｰﾗ
2	NBRGP0012QSZZ	AC	DJ		C	Bearing	軸受け
3	XRESP50−06000	AA	DD		C	E type ring	E-ﾘﾝｸﾞ
4	LPiNS0133FCZZ	AA	DD		C	Pin(φ2-10)	ﾍｲｺｳﾋﾟﾝ
5	NGERH0866FCZZ	AC	DD		C	Gear(22T)	ｷﾞﾔ
6	JKNBZ0143FCZZ	AD	DJ	N	C	Delivery roller knob	排紙ﾛｰﾗｰﾉﾌﾞ
7	MSPRD3057FCZZ	AC	DJ	N	B	Actuator spring	ｱｸﾁｭｴｰﾀｽﾌﾟﾘﾝｸﾞ
8	MLEVP0848FCZZ	AD	DJ	N	B	Delivery actuator	排紙ｱｸﾁｭｴｰﾀ
9	VHPGP1A71L3−1	AG	DS	N	B	Photo sensor(GP1A71L3)	ﾌｫﾄｾﾝｻｰ
10	LPLTP5998FCZZ	BB	GD	N	C	Lower pawl fixing plate	下爪取付けﾌﾟﾚｰﾄ
11	MSPRT2414FCZZ	AC	DJ		B	Separator pawl spring	剥離爪ｽﾌﾟﾘﾝｸﾞ
12	PTME−0276FCZ1	AK	EB		A	Fusing separator pawl lower	定着剥離爪下
⚠	RLMPU0673FCZZ	AZ	FQ	N	B	Lower heater lamp (100V)	下ﾋｰﾀｰﾗﾝﾌﾟ
⚠ 13	RLMPU0670FCZZ	AZ	FQ	N	B	Lower heater lamp (120V)	下ﾋｰﾀｰﾗﾝﾌﾟ
⚠	RLMPU0671FCZZ	AZ	FQ	N	B	Lower heater lamp (200V)	下ﾋｰﾀｰﾗﾝﾌﾟ
14	NROLR1396FCZZ	BH	HV	N	A	Lower heat roller	下ﾋｰﾄﾛｰﾗ
15	NBRGY0681FCZZ	AX	FG	N	B	Bearing	ﾍﾞｱﾘﾝｸﾞ
16	MSPRD3058FCZZ	AC	DJ	N	C	Roller stopper 20	ﾛｰﾗｽﾄｯﾊﾟ 20
17	CPLTM5997FC01	AL	EB	N	C	Lower thermistor fixing plate	下ｻｰﾐｽﾀ取付けﾌﾟﾚｰﾄ
18	RTHM−0021FCZZ	AN	EG		B	Thermostat	ｻｰﾓｽﾀｯﾄ
19	RDTCT0153FCZZ	AN	EQ	N	B	Thermistor	ｻｰﾐｽﾀｰ
20	XWHSD30−05080	AA	DD		C	Washer	ﾋﾗ ﾜｯｼｬ
21	XHBSD30P04000	AA	DD		C	Screw(3×4)	ﾋﾞｽ
22	XHBSD30P10000	AA	DD		C	Screw(3×10)	ﾋﾞｽ
23	CFRM−1071FC01	AL	EB	N	C	Fusing upper frame F	定着上ﾌﾚｰﾑF
24	XEBSD30P08000	AA	DD		C	Screw(3×8)	ﾋﾞｽ
25	CFRM−1072FC01	AL	EB	N	C	Fusing lower frame R	定着下ﾌﾚｰﾑR
26	LX−BZ0924FCZZ	AD	DJ		C	Screw	加圧調整ﾋﾞｽ
27	MSPRC3054FCZZ	AE	DJ	N	C	Pressure spring	加圧ｽﾌﾟﾘﾝｸﾞ
28	MLEVF0846FCZ1	AE	DS	N	C	Pressure lever R	加圧ﾚﾊﾞ-R
29	PRNGP0109FCZZ	AA	DJ	N	C	Ring	ﾘﾝｸﾞ
30	LHLDZ1399FCZZ	AC	DJ		C	Upper lamp holder F	上ﾗﾝﾌﾟﾎﾙﾀﾞｰF
31	XHBSD30P06000	AA	DD		C	Screw(3×6)	ﾋﾞｽ
32	MLEVF0845FCZ1	AE	DS	N	C	Pressure lever F	加圧ﾚﾊﾞ-F
33	MLEVP0786FCZZ	AC	DD		C	Pressure adjust lever F	圧力調整ﾚﾊﾞｰF
34	LX−BZ3006SC0S	AA	DD		C	Screw(3×6)	ﾋﾞｽ
35	PCOVP1638FCZZ	AZ	FX	N	C	Fusing lower cover	定着下ｶﾊﾞｰ
36	MLEVP0787FCZZ	AC	DD		C	Pressure adjust lever R	圧力調整ﾚﾊﾞｰR
37	PSHEP5015FCZZ	AD	DJ	N	C	Harness fixing sheet	ﾊｰﾈｽ押えｼｰﾄ
38	XEBSD30P06000	AA	DD		C	Screw(3×6)	ﾋﾞｽ
39	PGiDH1968FCZZ	AK	EB	N	C	Fusing front guide PG	定着前ﾍﾟｰﾊﾟｰｶﾞｲﾄﾞ
40	XHBS230P06000	AA	DD		C	Screw(3×6)	ﾋﾞｽ
41	DHAi−3354FC11	AH	DX	N	C	Fusing lower harness	定着下ﾊｰﾈｽ
42	LX−WZ0448FCZZ	AB	DD	N	C	Washer	ﾎﾟﾘｽﾗｲﾀﾞｰ
43	PSHEP5127FCZZ	AC	DJ	N	C	Fusing lower mylar	定着下ﾏｲﾗｰ
	(Unit)						
⚠	DUNTW7189DSZZ	CG	UM	N	E	Fusing unit(Include Block 24) (100V Series)	定着ﾕﾆｯﾄ(ﾌﾞﾛｯｸ24含む)
⚠ 901	DUNTW7189DS11	CG	UM	N	E	Fusing unit(Include Block 24) (120V Series)	定着ﾕﾆｯﾄ(ﾌﾞﾛｯｸ24含む)
⚠	DUNTW7189DS12	CG	UM	N	E	Fusing unit(Include Block 24) (200V Series)	定着ﾕﾆｯﾄ(ﾌﾞﾛｯｸ24含む)

26 定着駆動ﾕﾆｯﾄ (Fusing drive unit)

NO.	PARTS CODE	PRICE RANK Ex.	PRICE RANK Ja.	NEW MARK	PART RANK	DESCRIPTION	
1	CPLTM5999FC01	AL	EB	N	C	Motor fixing plate	ﾓｰﾀ取付けﾌﾟﾚｰﾄ
2	XHBSE40P08000	AA	DD		C	Screw(4×8)	ﾋﾞｽ
3	RMOTS0884FCZZ	BA	FX	N	B	Fusing motor	定着ﾓｰﾀ
4	XHBSD30P06000	AA	DD		C	Screw(3×6)	ﾋﾞｽ
5	MSPRT3063FCZZ	AC	DJ	N	C	Drive joint spring	駆動連結ｽﾌﾟﾘﾝｸﾞ
6	NGERH1305FCZZ	AK	DX		B	Gear(H59/25T)	ｷﾞﾔ
7	XRESP70−08000	AA	DD		C	E type ring	E-ﾘﾝｸﾞ
8	CPLTM6000FC01	AK	EB	N	C	Drive joint plate	駆動連結ﾌﾟﾚｰﾄ
9	NGERH1509FCZZ	AE	DJ	N	A	Gear(35T)	ｷﾞﾔ
10	PCLR−0477FCZZ	AE	DJ	N	C	HR collar	HR ｶﾗｰ
11	PRNGP0077FCZZ	AA	DD		C	Ring(E7)	ﾘﾝｸﾞ

25 定着ﾕﾆｯﾄ 2(Fusing unit 2)

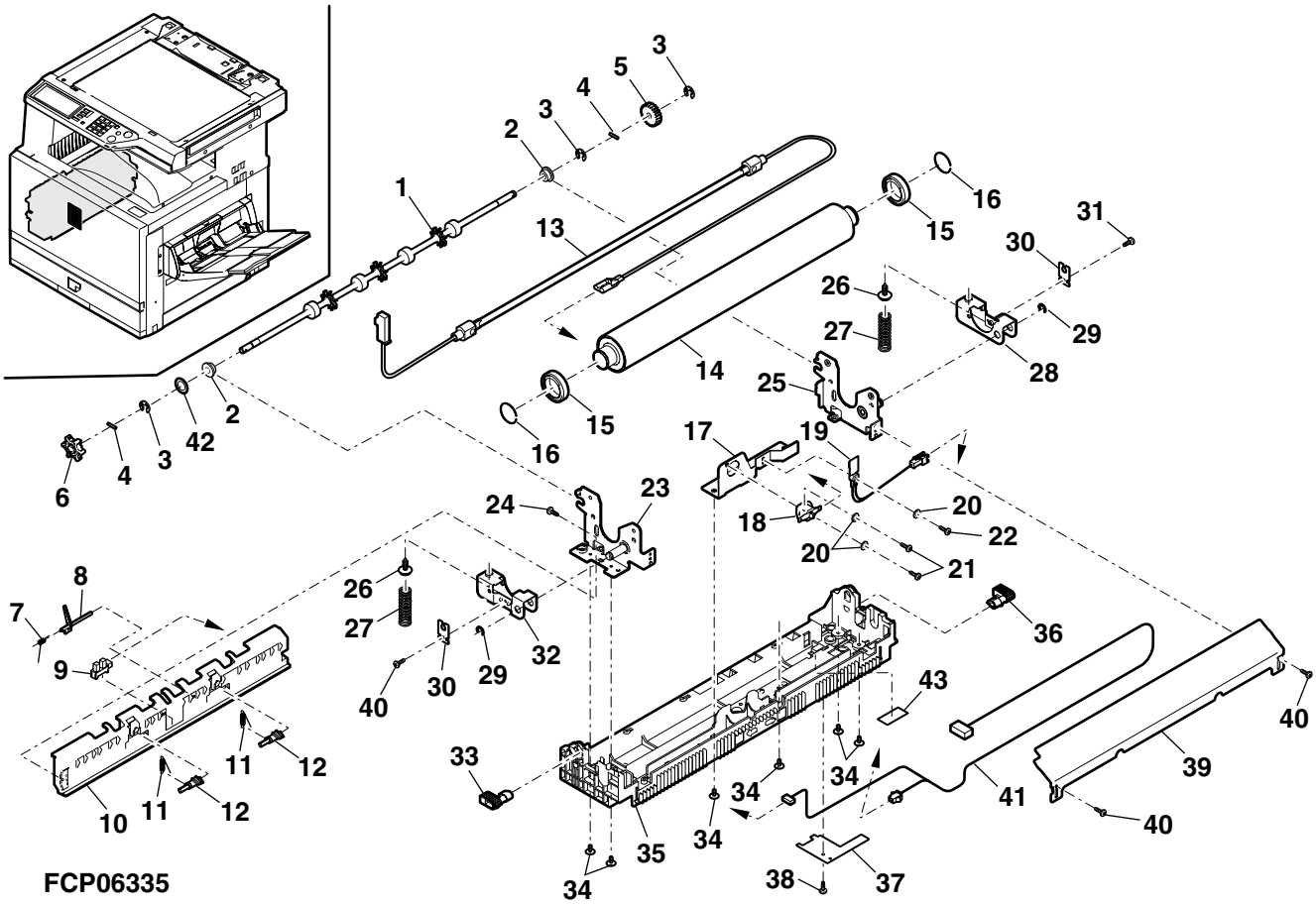

26 定着駆動ﾕﾆｯﾄ (Fusing drive unit)

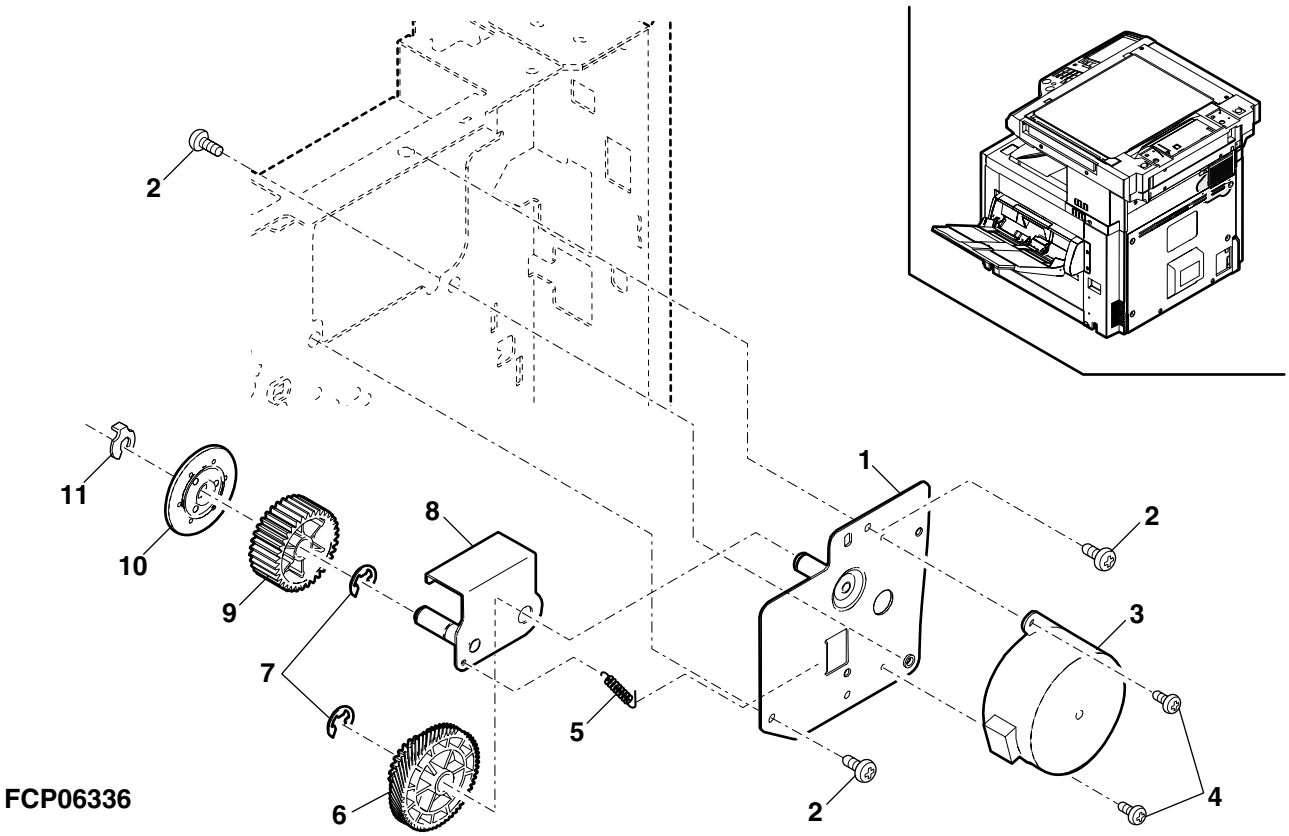

27 左ﾄﾞｱ (Left door)

NO.	PARTS CODE	PRICE RANK Ex.	PRICE RANK Ja.	NEW MARK	PART RANK	DESCRIPTION	
1	MLEVP0863FCZZ	AE	EB	N	C	Full actuator FU	満杯ｱｸﾁｭｴｰﾀ FU
2	PGiDM1970FCZZ	BB	EQ	N	C	Delivery guide upper	排紙ｶﾞｲﾄﾞ上
3	XHBSE40P08000	AA	DD		C	Screw(4×8)	ﾋﾞｽ
4	MSPRP3056FCZZ	AF	DS	N	C	Delivery roller spring	排紙ｺﾛ板ﾊﾞﾈ
5	PCLR-0475FCZZ	AA	DJ	N	C	Delivery collar	排紙ｺﾛ
6	XRESP70-08000	AA	DD		C	E type ring	E-ﾘﾝｸﾞ
7	LX-WZ0042FCZ1	AA	DD		C	Washer	ﾋﾗﾜｯｼｬｰ
8	MSPRC2654FCZ1	AB	DJ		C	Separator pressure spring	離接加圧ｽﾌﾟﾘﾝｸﾞ
9	CSTYM0294FC01	AS	EQ	N	C	Delivery stay	排紙ｽﾃｰ
10	JKNBZ0144FCZZ	AE	DS	N	C	Roller knob	ﾀﾞｲﾛｰﾗｰﾉﾌﾞ
11	LX-BZ0944FCZ1	AH	DS	N	C	Screw	ﾋﾞｽ
12	MSLi-0140FCZZ	BA	FX	N	C	Slide rail	ｽﾗｲﾄﾞﾚｰﾙ
13	LFRM-1079FCZZ	AF	DS	N	C	Transfer slide FU	転写ｽﾗｲﾄﾞ FU
14	LFRM-1080FCZZ	AH	DX	N	C	Transfer slide PU	転写ｽﾗｲﾄﾞ PU
15	LSTYM0298FCZZ	AH	DX	N	C	Delivery stay lower	排紙ｽﾃｰ下
16	MLEVP0781FCZZ	AD	DJ		C	Left door release lever	左ﾄﾞｱ解除ﾚﾊﾞｰ
17	PTME-0290FCZZ	AD	DJ	N	C	Delivery lock pawl	排紙ﾛｯｸ爪
18	XRESP50-06000	AA	DD		C	E type ring	E-ﾘﾝｸﾞ
19	MSPRD3102FCZZ	AC	DJ	N	C	Lock spring F	ﾛｯｸｽﾌﾟﾘﾝｸﾞ F
20	NSFTZ2697FCZZ	AN	EQ	N	C	Delivery lock shaft	排紙ﾛｯｸｼｬﾌﾄ
21	MSPRD3103FCZZ	AD	DJ	N	C	Lock spring R	ﾛｯｸｽﾌﾟﾘﾝｸﾞ R
22	LFRM-1073FCZ1	AS	EG	N	C	Delivery frame F	排紙ﾌﾚｰﾑ F
23	LFRM-1074FCZZ	AS	EQ	N	C	Delivery frame R	排紙ﾌﾚｰﾑ R
24	PGiDM1969FCZZ	AN	FQ	N	B	Reverse gate	反転ｹﾞｰﾄ
25	MSPRD3163FCZZ	AC	DJ	N	C	Gate earth spring	ｹﾞｰﾄｱｰｽｽﾌﾟﾘﾝｸﾞ
26	MARMP0298FCZZ	AC	DJ	N	C	Reverse gate arm	反転ｹﾞｰﾄｱｰﾑ
27	LSTYM0301FCZZ	AF	DS	N	C	Delivery stay upper	排紙ｽﾃｰ上
28	GCAB-0981FCZ5	AZ	FX	N	D	FU delivery cabinet (100V Series)	FU 排紙ｷｬﾋﾞ
	GCAB-0981FCZZ	BB	GD	N	D	FU delivery cabinet (200V Series)	FU 排紙ｷｬﾋﾞ
29	PCOVP1656FCZZ	AG	DX	N	D	FU delivery enter cover	FU 排紙口ｶﾊﾞｰF
30	PBRSR0219FCZ1	AG	DX	N	B	Discharge brush	除電ﾌﾞﾗｼ
31	XEBSD40P08000	AA	DD		C	Screw(4×8)	ﾋﾞｽ
32	LPiNS0096FCZZ	AB	DD		C	Pin(φ3-12)	ﾋﾟﾝ
33	PSHEZ5074FCZZ	AC	DJ	N	C	Delivery edge protect sheet	排紙ｴｯｼﾞ保護ｼｰﾄ
34	LPiNS0327FCZZ	AC	DJ		C	Pin(φ2-10)	ﾋﾟﾝ
35	LPiNS0320FCZZ	AB	DJ		C	Spring pin(φ2-8)	ｽﾌﾟﾘﾝｸﾞﾋﾟﾝ

27 左ﾄﾞｱ (Left door)

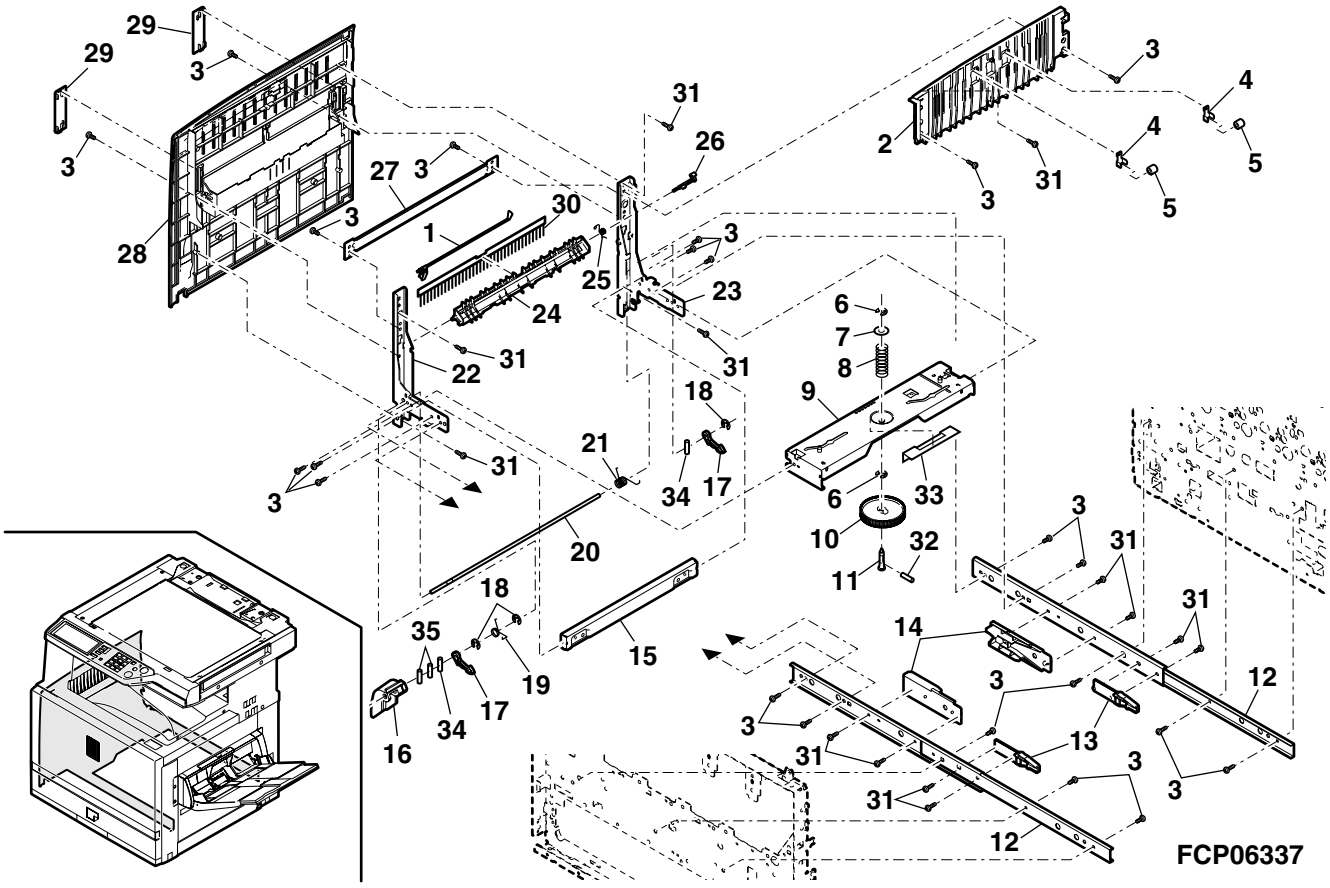

28 FD 排紙ﾕﾆｯﾄ (FD delivery unit)

NO.	PARTS CODE	PRICE RANK Ex.	PRICE RANK Ja.	NEW MARK	PART RANK	DESCRIPTION	
1	RMOTS0890FCZZ	BA	FX	N	B	Slide motor	ｽﾗｲﾄﾞﾓｰﾀ
2	XHBSD30P06000	AA	DD		C	Screw(3×6)	ﾋﾞｽ
3	CPLTM6017FC01	AG	DX	N	C	Slide motor fixing plate	ｽﾗｲﾄﾞﾓｰﾀ取付けﾅﾌﾟﾚｰﾄ
4	VHPGP1A71L3−1	AG	DS	N	B	Photo sensor(GP1A71L3)	ﾌｫﾄｾﾝｻｰ
5	NGERH1531FCZZ	AD	DJ	N	C	Shifter gear(24/50)	ｼﾌﾀｰｷﾞｬ
6	XRESP40−06000	AA	DD		C	E type ring	E-ﾘﾝｸﾞ
7	PGiDM1971FCZZ	AY	FQ	N	C	FD delivery guide IN	FD 排紙ｶﾞｲﾄﾞ IN
8	MSPRP3082FCZZ	AF	DS	N	C	FD earth plate spring B	FD ｱｰｽ板 B ｽﾌﾟﾘﾝｸﾞ
9	NPLYZ0402FCZZ	AD	DJ	N	C	Offset pulley(22T)	ｵﾌｾｯﾄﾌﾟｰﾘｰ
10	NBRGC0683FCZZ	AC	DJ	N	C	Bearing	軸受け
11	MSPRP3081FCZZ	AF	DS	N	C	FD earth plate spring A	FD ｱｰｽ板 A ｽﾌﾟﾘﾝｸﾞ
12	LPLTM6016FCZZ	AC	DJ	N	C	Pulley fulcrum plate	ﾌﾟｰﾘｰ支点ﾌﾟﾚｰﾄ
13	XEBSE30P06000	AA	DD		C	Screw(3×6)	ﾋﾞｽ
14	MLEVP0851FCZZ	AE	DS	N	C	FD enpty actuator	FD 満杯ｱｸﾁｭｴｰﾀ
15	PGiDM1972FCZZ	AY	FQ	N	C	FD delivery PG	FD 排紙ﾍﾟｰﾊﾟｰｶﾞｲﾄﾞ
16	PBRSR0218FCZ1	AH	DX	N	B	FD discharge brush	FD 除電ﾌﾞﾗｼ
17	NROLP1432FCZZ	AE	DJ	N	C	Belt support lever roller	FD 排紙従動ﾛｰﾗ
18	MSPRT3064FCZZ	AD	DJ	N	C	FD drive belt roller spring	FD 排紙ｺﾛｽﾌﾟﾘﾝｸﾞ
19	XRESP50−06000	AA	DD		C	E type ring	E-ﾘﾝｸﾞ
20	NBRGC0188FCZZ	AB	DD		C	Bearing	軸受け
21	LPiNS0258FCZZ	AA	DD		C	Spring pin(φ3-10)	ｽﾌﾟﾘﾝｸﾞﾋﾟﾝ
22	NROLR1398FCZ1	AR	EQ	N	C	FD delivery roller A	FD 排紙ﾛｰﾗ A
23	PRNGP0077FCZZ	AA	DD		C	Ring(E7)	ﾘﾝｸﾞ
24	NGERH0484FCZZ	AB	DD		C	Gear(46T)	ｷﾞｬ
25	NBLTH0374FCZZ	AE	DJ	N	C	FD delivery belt	FD 排紙ﾍﾞﾙﾄ
26	NGERH0866FCZZ	AC	DD		C	Gear(22T)	ｷﾞｬ
27	NPLYZ0146FCZZ	AB	DD		C	Pulley(22MXL)	ﾌﾟｰﾘｰ
28	LPiNS0165FCZZ	AB	DD		C	Pin(φ2-8)	ﾍｲｺｳﾋﾟﾝ
29	NROLR1399FCZ1	AR	EQ	N	C	FD delivery roller B	FD 排紙ﾛｰﾗ B
30	NSFTZ2713FCZZ	AK	DX	N	C	FD slide shaft	FD ｽﾗｲﾄﾞｼｬﾌﾄ
31	PGiDM2007FCZZ	AP	EQ	N	C	FD delivery guide OUT	FD 排紙ｶﾞｲﾄﾞ OUT
32	LPLTM6073FCZZ	AC	DJ	N	C	FD fusing presure plate	FD 定着圧接ﾌﾟﾚｰﾄ
33	MLEVP0850FCZZ	AG	DX	N	C	FD delivery actuator	FD 排紙ｱｸﾁｭｴｰﾀ
34	MSPRT3110FCZ1	AC	DJ	N	C	FD Delivery actuator spring	FD 排紙ｱｸﾁｭｴｰﾀｽﾌﾟﾘﾝｸﾞ
35	XEBSE40P08000	AA	DD		C	Screw(4×8)	ﾋﾞｽ
36	PCLR−0479FCZZ	AC	DJ	N	C	FD slide collar	FD ｽﾗｲﾄﾞｶﾗｰ
37	LX−BZ0840FCZZ	AC	DD		C	Screw	ﾗｯｸ固定ﾋﾞｽ
38	XHBSE40P08000	AA	DD		C	Screw(4×8)	ﾋﾞｽ
39	XEBSD30P08000	AA	DD		C	Screw(3×8)	ﾋﾞｽ
40	VHPGP1A71L3−1	AG	DS	N	B	Photo sensor(GP1A71L3)	ﾌｫﾄｾﾝｻｰ
	(Unit)						
901	DUNT−7193DSZZ	BG	GX	N	E	FD delivery unit(Without No.1,2,3,5,6,38,39,40) FD 排紙ﾕﾆｯﾄ (No.1,2,3,5,6,38,39,40 除く)	

28 FD 排紙ﾕﾆｯﾄ (FD delivery unit)

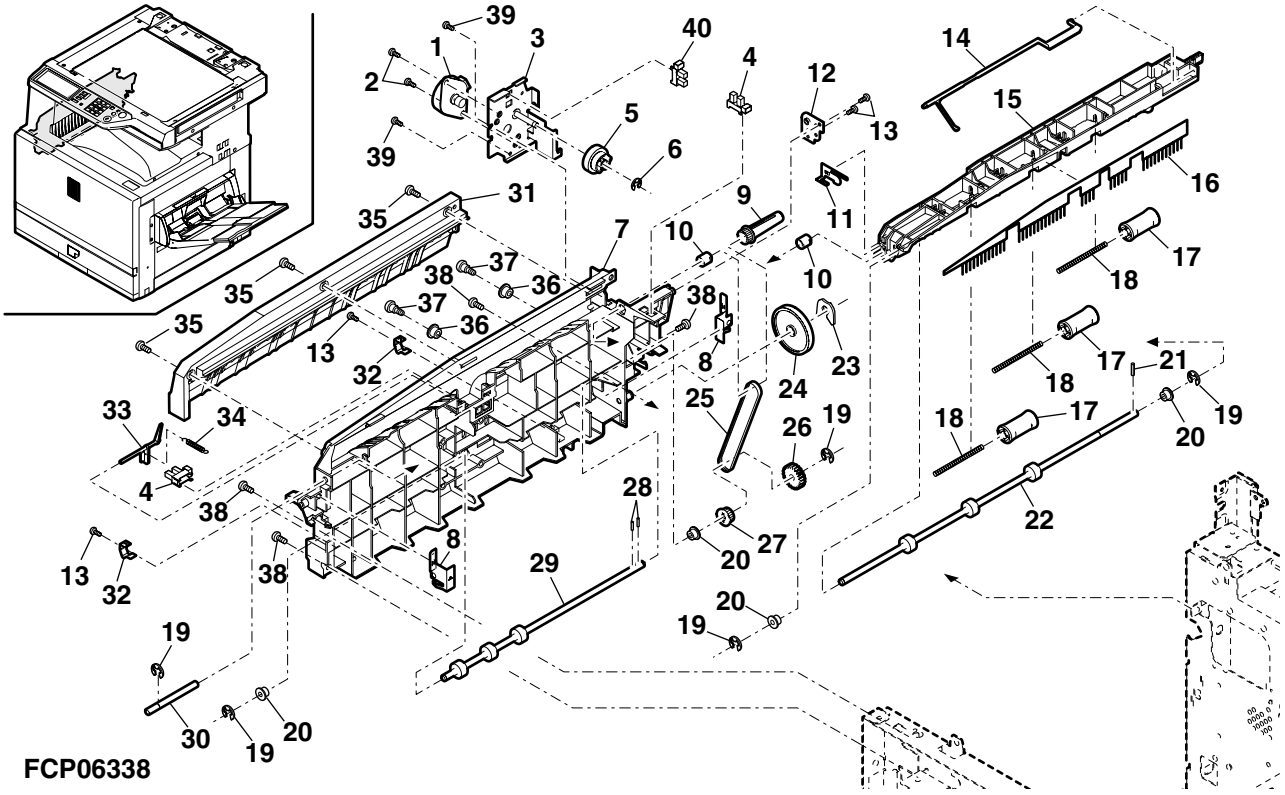

29 ﾌﾚｰﾑ 1(Frame 1)

NO.	PARTS CODE	PRICE RANK Ex.	PRICE RANK Ja.	NEW MARK	PART RANK	DESCRIPTION	
1	PCAPH0082FCZZ	AD	DJ	N	B	handle cap	ﾊﾝﾄﾞﾙｷｬｯﾌﾟ
2	JHNDM0163FCZ1	AG	DX	N	C	Handdle N	ﾊﾝﾄﾞﾙ N
3	XEBSE30P06000	AA	DD		C	Screw(3×6)	ﾋﾞｽ
4	LPLTM6100FCZZ	AM	EG	N	C	Joint support plate	連結補強ﾌﾟﾚｰﾄ
5	LPLTM6093FCZZ	AM	EG	N	C	Rear exterior fixing plate	後ｷｬﾋﾞ取付けﾌﾟﾚｰﾄ
6	LANGF1422FCZZ	AG	DS	N	C	Rear angle L	後端ｱﾝｸﾞﾙ L
7	LANGF1421FCZZ	AF	DS	N	C	Rear angle R	後端ｱﾝｸﾞﾙ R
8	LPLTM6097FCZZ	AD	DJ	N	C	MF fixing plate F	手差し取付け板 F
14	PCOVP1634FCZZ	AF	DS	N	C	MFP cover B	MFP ｶﾊﾞｰ B
15	XHBSE40P08000	AA	DD		C	Screw(4×8)	ﾋﾞｽ
16	CPLTM5974FC01	AH	DX	N	C	Process guide plate K	ﾌﾟﾛｾｽｶﾞｲﾄﾞﾌﾟﾚｰﾄ K
17	CPLTM5975FC01	AL	EB	N	C	Process guide plate C	ﾌﾟﾛｾｶﾞｲﾄﾞｽﾌﾟﾚｰﾄ C
18	XHBSE30P08000	AA	DD		C	Screw(3×8)	ﾋﾞｽ
19	LRALM0202FCZZ	AN	EG	N	C	Caseette rail L	ｶｾｯﾄﾚｰﾙ左
20	XHBSD40P06000	AA	DD		C	Screw(4×6)	ﾋﾞｽ
21	MSPRP3164FCZZ	AD	DJ	N	C	Earth spring	ｱｰｽｽﾌﾟﾘﾝｸﾞ
22	LHLDZ1546FCZZ	AC	DJ	N	C	Lock switch protect holder	ﾛｯｸｽｲｯﾁ保護ﾎﾙﾀﾞｰ
23	XEBSD30P08000	AA	DD		C	Screw(3×8)	ﾋﾞｽ

29 ﾌﾚｰﾑ 1(Frame 1)

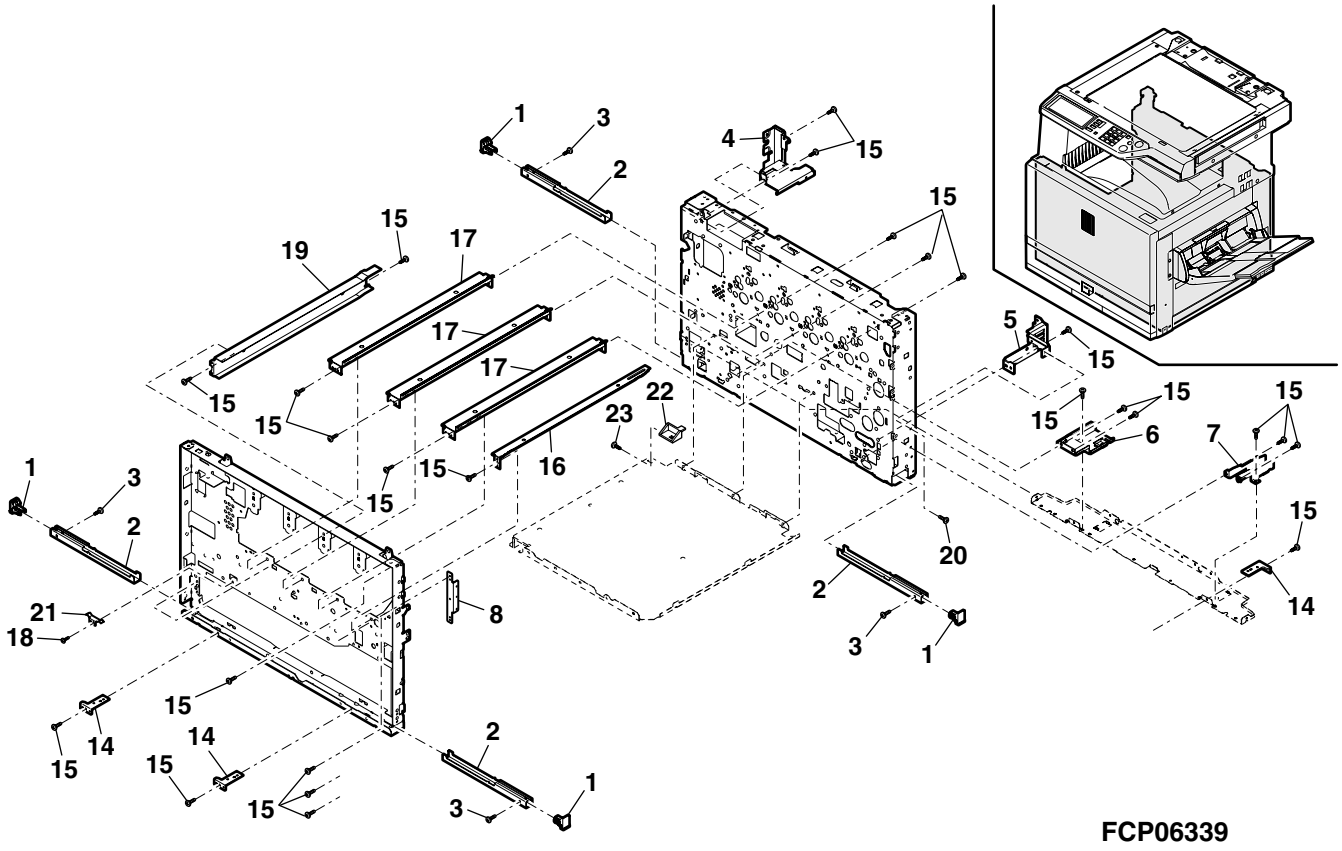

30 ﾌﾚｰﾑ 2(Frame 2)

NO.	PARTS CODE	PRICE RANK Ex.	PRICE RANK Ja.	NEW MARK	PART RANK	DESCRIPTION	
1	QSW-C1390QCZZ	AN	EQ		B	Power switch(LLN35C1)	電源ｽｲｯﾁ
2	XHBSD30P14000	AA	DD		C	Screw(3×14)	ﾋﾞｽ
3	QSW-M0502FCZZ	AH	DX		B	Door switch(AM51632C531)	ﾄﾞｱｽｲｯﾁ
4	LHLDW1152FCZZ	AC	DJ		C	Bushing(EH-14)	ﾌﾞｯｼｭ
5	NGERH1530FCZ1	AK	EB	N	C	DV drive gear(21T)	現像駆動ｷﾞﾔ
6	LX-BZ0071FCZZ	AA	DD		C	Screw	ﾋﾞｽ
7	TCAUH1035FCZZ	AC	DJ		C	HT caution label (Japan only)	ｺｳｵﾝﾁｭｳｲﾗﾍﾞﾙ
8	PCOVP1654FCZZ	AM	EG		C	T heater cover (Japan only)	T ﾋｰﾀｰｶﾊﾞｰ
9	LX-BZ0959FCZZ	AC	DD	N	C	Screw	ﾋﾞｽ
10	LPLTM6089FCZZ	AK	DX	N	C	Heater fixing plate (Japan only)	ﾋｰﾀｰﾄﾘﾂｹﾊﾞﾝ
11	RHETP0084FCZZ	AS	EQ		C	Dehumidify heater (Japan only)	除湿ﾋｰﾀｰ
12	PGiDM1992FCZZ	AD	DJ	N	C	PS insert guide R	PS 挿入ｶﾞｲﾄ R
13	PGiDM1991FCZZ	AE	DJ	N	C	PS insert guide F	PS 挿入ｶﾞｲﾄ F
14	GLEGG0075FCZZ	AE	DJ		C	Rubber foot	ｺﾞﾑｱｼ
15	LX-BZ0898FCZZ	AC	DD		C	Screw	ﾋﾞｽ
16	LBOSZ2114FCZZ	AK	EB	N	C	Process fulcrum boss	ﾌﾟﾛｾｽ位置決めﾎﾞｽ
17	LX-BZ0855FCZZ	AC	DD		C	Screw	ﾋﾞｽ
18	XHBSD30P06000	AA	DD		C	Screw(3×6) (Japan only)	ﾋﾞｽ
19	XHBSE30P08000	AA	DD		C	Screw(3×8) (Japan only)	ﾋﾞｽ
20	NSFTZ2685FCZ1	AL	EB	N	C	DV gear shaft	現像ｷﾞﾔｼｬﾌﾄ
21	XWHSD40-08100	AA	DD		C	Washer	ﾋﾗ ﾜｯｼｬ
22	XHBSE40P08000	AA	DD		C	Screw(4×8)	ﾋﾞｽ
23	PCOVP1660FCZZ	AM	EG	N	C	Caseette cover R	ｶｾｯﾄｶﾊﾞｰ R
24	PCLR-0441FCZZ	AK	DX		C	collar	ｺﾛ
25	LX-BZ0960FCZZ	AC	DD		C	Screw	ﾋﾞｽ
26	PCOVP1659FCZZ	AK	DX	N	C	Caseette cover L	ｶｾｯﾄｶﾊﾞｰ L
27	XBBSD30P08000	AA	DD		C	Screw(3×8)	ﾋﾞｽ
28	DUNT-7272DSZZ	CU	VZ	N	E	LED exposure unit	LED 露光ﾕﾆｯﾄ
30	PCOVP1700FCZZ	AG	DX	N	C	Connector cover	ｺﾈｸﾀｶﾊﾞｰ
31	XEBSD40P08000	AA	DD		C	Screw(4×8)	ﾋﾞｽ

30 ﾌﾚｰﾑ 2(Frame 2)

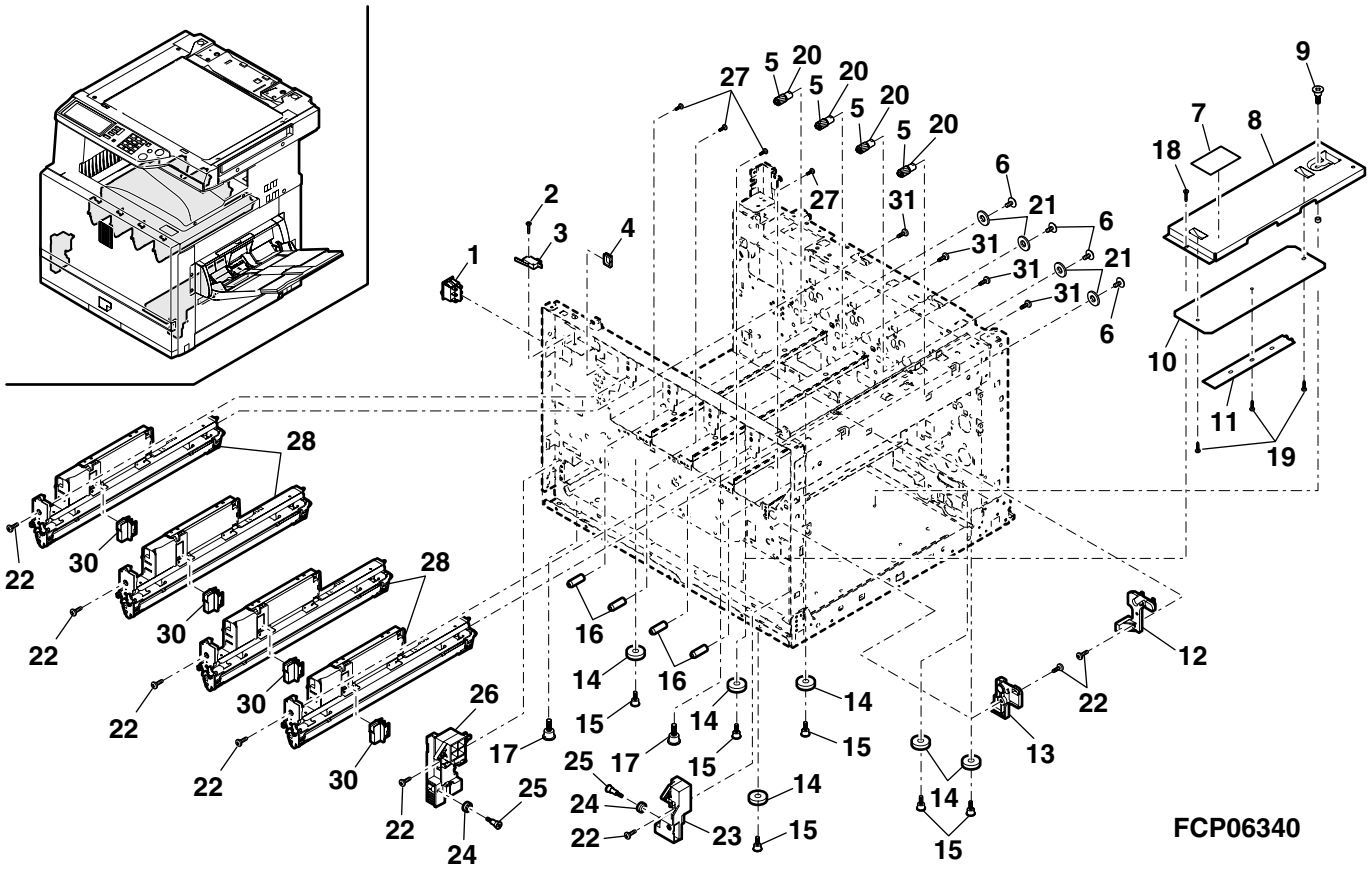

31 ﾌﾚｰﾑ 3(Frame 3)

NO.	PARTS CODE	PRICE RANK Ex.	PRICE RANK Ja.	NEW MARK	PART RANK	DESCRIPTION	
1	QSW-M0502FCZZ	AH	DX		B	Door switch(AM51632C531)	ﾄﾞｱｽｲｯﾁ
2	LDAiU0643FCZZ	AH	DX	N	C	Position block R	位置決めﾌﾞﾛｯｸ R
3	XEBSD30P16000	AA	DD		C	Screw(3×16)	ﾋﾞｽ
4	LHLDZ1525FCZZ	AG	DJ	N	C	Full detector holder	満杯検知ﾎﾙﾀｰ
5	LSUPP0126FCZZ	AC	DJ	N	C	Supporter(SPLSN-4)	ｻﾎﾟｰﾀｰ
⚠	CPWBF1546FCE1	BB	GD	N	E	AC power supply PWB (Japan only)	AC 電源基板
⚠ 6	CPWBF1546FCE2	BA	FX	N	E	AC power supply PWB (Except Japan)[100V series]	AC 電源基板
⚠	CPWBF1546FCE4	BA	FX	N	E	AC power supply PWB (Except Japan)[200V series]	AC 電源基板
7	LPLTM6027FCZZ	AH	DX	N	C	Driver PWB fixing plate	ﾄﾞﾗｲﾊﾞ基板取付けﾌﾟﾚｰﾄ
8	CPWBN1545FCE1	BQ	LP	N	E	Driver PWB	ﾄﾞﾗｲﾊﾞｰ基板
9	XHBSE30P08000	AA	DD		C	Screw(3×8)	ﾋﾞｽ
15	CPLTM6024DS51	AU	EZ	N	E	Gate solenoid unit	ｹﾞｰﾄｿﾚﾉｲﾄﾞﾕﾆｯﾄ
17	DHAi-3362FCZZ	AY	FQ	N	C	AC control harness	AC ｺﾝﾄﾛｰﾙﾊｰﾈｽ
18	XHBSE30P06000	AA	DD		C	Screw(3×6)	ﾋﾞｽ
19	XHBSE40P08000	AA	DD		C	Screw(4×8)	ﾋﾞｽ
20	LPLTM6079FCZZ	AD	DJ	N	C	Dask connector fixing plate	ﾃﾞｽｸｺﾈｸﾀ取付けﾌﾟﾚｰﾄ
21	LPLTM5980FCZZ	AK	EB	N	C	Inlet fixing plate	ｲﾝﾚｯﾄ取付けﾌﾟﾚｰﾄ
22	LHLDW1151FCZZ	AB	DJ		C	Wire saddle(WWS-2)	ﾜｲﾔｰｻﾄﾞﾙ
23	LHLDW1152FCZZ	AC	DJ		C	Bushing(EH-14)	ﾌﾞｯｼｭ
24	DUNT-7289DSZZ	AK	DX	N	E	Inlet unit	ｲﾝﾚｯﾄﾕﾆｯﾄ
25	XBPSD40P08K00	AA	DD		C	Screw(4×8K)	ﾋﾞｽ
26	VHi28F081L07F	AY	FQ	N	E	PCU FLASH ROM(28F081L07F)	PCU ﾌﾗｯｼｭﾛﾑ
27	DHAi-3412FCZZ	AC	DJ	N	C	DM drive earth harness	DM 駆動ｱｰｽﾊｰﾈｽ
28	CPWBN1544DS51	BR	LX	N	E	PCU PWB	PCU 基板
29	LPLTM5981FCZZ	AK	DX	N	C	Driver PWB fixing plate	ﾄﾞﾗｲﾊﾞ基板取付けﾌﾟﾚｰﾄ
30	XBPSD30P08K00	AA	DD		C	Screw(3×8K)	ﾋﾞｽ
⚠ 31	RDENC0020FCZ1	BU	NE	N	E	AC/DC power supply PWB (100V Series)	AC/DC 電源基板
⚠	RDENC0021FCZZ	BW	RJ	N	E	AC/DC power supply PWB (200V Series)	AC/DC 電源基板
32	VHPGP1A71L3-1	AG	DS	N	B	Photo sensor(GP1A71L3)	ﾌｫﾄｾﾝｻｰ
33	LPLTM5979FCZZ	AV	FG	N	C	Power supply fixing plate	電源取付けﾌﾟﾚｰﾄ
34	LHLDW1154FCZZ	AC	DJ		C	Wire holder(LWS5S2W)	ﾎﾙﾀﾞｰ
35	LSUPP0126FCZZ	AC	DJ	N	C	Supporter(SPLSN-4)	ｻﾎﾟｰﾀｰ
36	XHBSE30P08000	AA	DD		C	Screw(3×8)	ﾋﾞｽ
⚠ 37	RDENC0013FCZZ	BK	HG	N	E	High voltage TC power supply PWB	ｺｳｱﾂ TC 電源基板
38	QCNW-0190FCZZ	AD	DJ	N	C	MC-TC FFC	MC-TC FFC
⚠ 39	RDENC0012FCZZ	BR	LX	N	E	High voltage MC power supply PWB	ｺｳｱﾂ MC 電源基板
40	CDAiU0577FC31	BE	GN		E	Lift-up unit	ﾘﾌﾄｱｯﾌﾟﾕﾆｯﾄ
42	NFANP0072FCZZ	BA	FX	N	B	Process exhaust fan	ﾌﾟﾛｾｽ排気ﾌｧﾝ
43	XEPSD40P40000	AC	DD	N	C	Screw(4×40)	ﾋﾞｽ
44	PDUC-0169FCZ1	AE	DS	N	C	Inhalation of air duct fan fixing plate	吸気ﾀﾞｸﾄﾌｧﾝ取付け板
45	LPLTM6102FCZ1	AN	EG	N	C	Inhalation of air duct fixing plate	吸気ﾀﾞｸﾄ取付けﾌﾟﾚｰﾄ
46	MSPRD3125FCZZ	AD	DJ	N	C	PSM spring	PSM ｽﾌﾟﾘﾝｸﾞ
47	LX-BZ0833FCZZ	AC	DD		C	Screw	ﾋﾞｽ
48	QSW-C9294QCZZ	AF	DS		B	Dry heater switch(ALP SDDJE1) (Japan only)	除湿ﾋｰﾀｰｽｲｯﾁ
49	XEBSD30P08000	AA	DD		C	Screw(3×8)	ﾋﾞｽ
50	LX-LZ0022FCZZ	AB	DD		C	Rivet(KGPS-5RF)	ﾘﾍﾞｯﾄ
51	LX-WZ0443FCZZ	AB	DD		C	Washer	ｱｰｽ用ﾋﾗﾜｯｼｬｰ
52	DHAi-3426FCZZ	AQ	EG	N	C	FAX AC harness (AR-C260F/C260FP)	FAX AC ﾊｰﾈｽ
53	LX-WZ0443FCZZ	AB	DD		C	Washer (AR-C260F/C260FP)	ｱｰｽ用ﾋﾗﾜｯｼｬｰ
54	XBPSD40P08K00	AA	DD		C	Screw(4×8K) (AR-C260F/C260FP)	ﾋﾞｽ
55	XHBSD30P08KS0	AB	DD	N	C	Screw(3×8KS)	ﾋﾞｽ
56	RMOTS0883FCZZ	BA	FX	N	B	PS motor	PS ﾓｰﾀ
58	CPWBF1561DS51	AZ	FQ	N	E	Reacter PWB (200V Series)	ﾘｱｸﾀｰ基板

32 転写挿入ｶﾞｲﾄﾞ (Transfer insert guide)

NO.	PARTS CODE	PRICE RANK Ex.	PRICE RANK Ja.	NEW MARK	PART RANK	DESCRIPTION	
1	PGiDM1967FCZZ	AR	EG	N	C	Belt insert guide R	ﾍﾞﾙﾄ挿入ｶﾞｲﾄﾞ R
2	MSPRP3030FCZZ	AD	DJ	N	C	Transfer electrode spring Y	転写接点 Y ｽﾌﾟﾘﾝｸﾞ
3	MSPRP3031FCZZ	AF	DS	N	C	Transfer electrode spring M	転写接点 M ｽﾌﾟﾘﾝｸﾞ
4	MSPRP3033FCZZ	AG	DX	N	C	Transfer electrode spring C	転写接点 C ｽﾌﾟﾘﾝｸﾞ
5	MSPRP3034FCZZ	AG	DX	N	C	Transfer electrode spring K	転写接点 K ｽﾌﾟﾘﾝｸﾞ
6	MSPRD3035FCZZ	AC	DJ	N	C	Transfer electrode spring	転写電極ｽﾌﾟﾘﾝｸﾞ
7	MLEVP0841FCZZ	AG	DX	N	C	Belt support lever	ﾍﾞﾙﾄ保持ﾚﾊﾞｰ
8	LDAiU0639FCZZ	AE	DS	N	C	Belt support block	ﾍﾞﾙﾄ保持ﾌﾞﾛｯｸ
9	MSPRC3029FCZZ	AC	DJ	N	C	Belt support spring	ﾍﾞﾙﾄ保持ｽﾌﾟﾘﾝｸﾞ
10	NROLP1408FCZZ	AD	DJ	N	C	Belt support lever roller	ﾍﾞﾙﾄ補助ﾚﾊﾞｰﾛｰﾗ
11	XEBSD40P08000	AA	DD		C	Screw(4×8)	ﾋﾞｽ
12	PGiDM1966FCZ1	AP	EQ	N	C	Belt insert guide F	ﾍﾞﾙﾄ挿入ｶﾞｲﾄﾞ F
13	MLEVP0840FCZZ	AD	DJ	N	C	Belt protect lever	ﾍﾞﾙﾄﾌﾟﾛﾃｸﾄﾚﾊﾞｰ
14	LPLTM5976FCZZ	AL	DS	N	C	Belt protect plate	ﾍﾞﾙﾄﾌﾟﾛﾃｸﾄﾌﾟﾚｰﾄ
15	MSPRT3032FCZZ	AC	DJ	N	C	Protect plate spring	ﾌﾟﾛﾃｸﾄ板ｽﾌﾟﾘﾝｸﾞ
16	PDUC-0167FCZ2	AK	EB	N	C	Ozone duct A	ｵｿﾞﾝﾀﾞｸﾄ A
17	DHAi-3367FCZZ	AT	EZ	N	C	CRUM harness	CRUM ﾊｰﾈｽ
18	XEBSD30P10000	AA	DD		C	Screw(3×10)	ﾋﾞｽ
19	XEBSD40P08000	AA	DD		C	Screw(4×8)	ﾋﾞｽ

31 ﾌﾚｰﾑ 3(Frame 3)

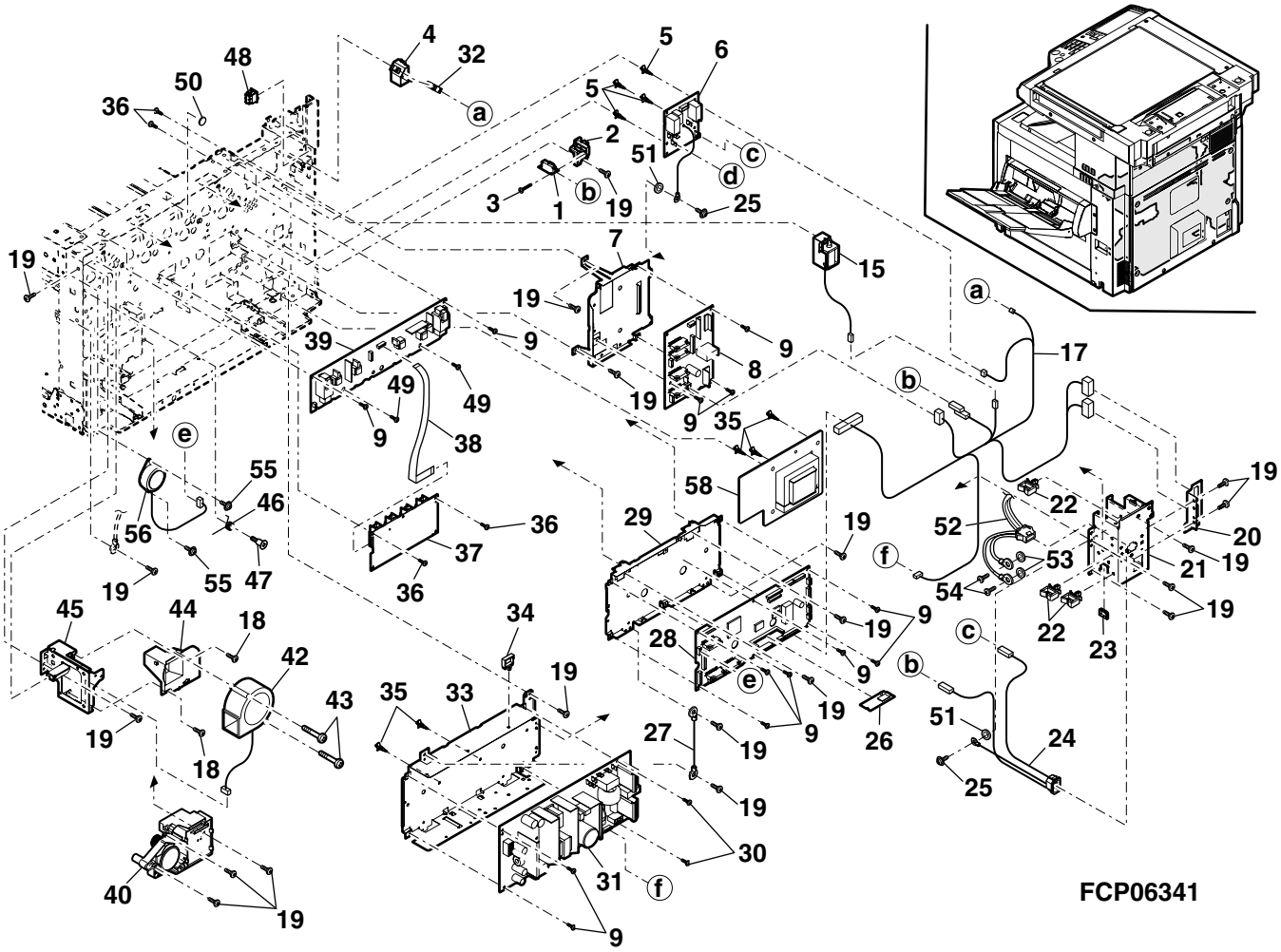

32 転写挿入ｶﾞｲﾄﾞ (Transfer insert guide)

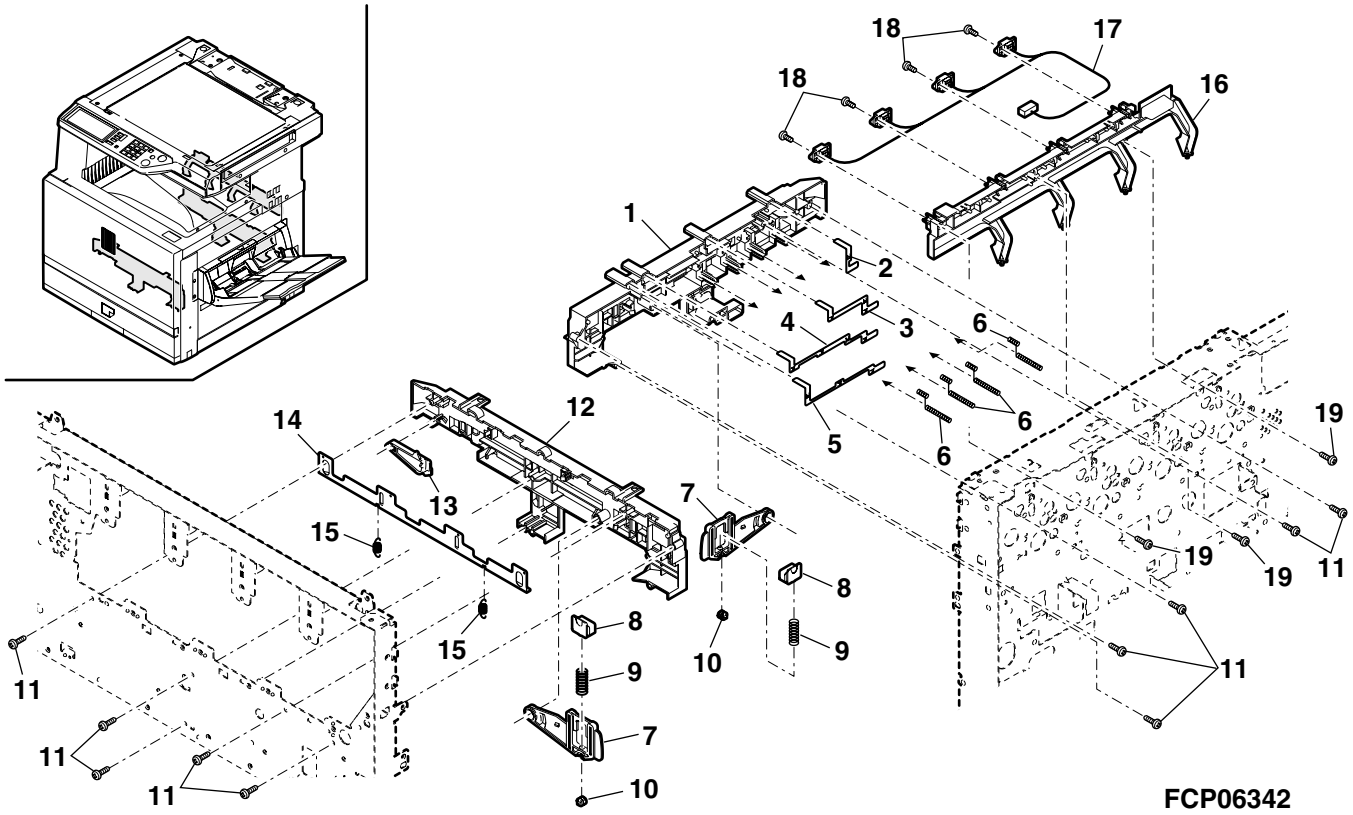

33 ﾀﾞｸﾄﾕﾆｯﾄ (Duct unit)

NO.	PARTS CODE	PRICE RANK Ex.	PRICE RANK Ja.	NEW MARK	PART RANK	DESCRIPTION	
1	LHLDZ1508FCZZ	AW	FG	N	C	Ozone filter holder	ｵｿﾞﾝﾌｨﾙﾀｰﾎﾙﾀﾞｰ
2	PFiLZ0290FCZ1	BA	FX	N	A	Ozone filter	ｵｿﾞﾝﾌｨﾙﾀｰ
4	NFANP0068FCZZ	BB	GD	N	B	Cooling fan	冷却ﾌｧﾝ
5	XEBSD40P35000	AC	DD	N	C	Screw(4×35)	ﾋﾞｽ
6	DHAi-3364FCZZ	AX	FG	N	C	HL AC supply harness (100V Series)	HL AC 供給ﾊｰﾈｽ
	DHAi-3402FC11	AY	FQ	N	C	HL AC supply harness (200V Series)	HL AC 供給ﾊｰﾈｽ
7	XBPSD40P06K00	AA	DD		C	Screw(4×6K)	ﾋﾞｽ
8	XHBSE40P08000	AA	DD		C	Screw(4×8)	ﾋﾞｽ
9	MSPRC2645FCZZ	AB	DJ		C	MF reverse pressure spring	手差し逆転加圧ｽﾌﾟﾘﾝｸﾞ
10	LX-BZ0850FCZZ	AC	DD		C	Screw	ﾋﾞｽ
11	LX-WZ0443FCZZ	AB	DD		C	Washer	ｱｰｽ用ﾋﾗﾜｯｼｬｰ
13	XEBSD40P08000	AA	DD		C	Screw(4×8)	ﾋﾞｽ
15	PDUC-0168FCZZ	AK	DX	N	C	Ozone duct B	ｵｿﾞﾝﾀﾞｸﾄB
16	LPLTM5973FCZZ	AQ	EQ	N	C	Fusing separate plate	定着仕切りﾌﾟﾚｰﾄ
17	PDUC-0166FCZZ	AX	EZ	N	C	Fan duct	ﾌｧﾝﾀﾞｸﾄ
20	PSHEP5111FCZZ	AA	DJ	N	C	Process guide sheet	ﾌﾟﾛｾｽｶﾞｲﾄﾞｼｰﾄ

33 ﾀﾞｸﾄﾕﾆｯﾄ (Duct unit)

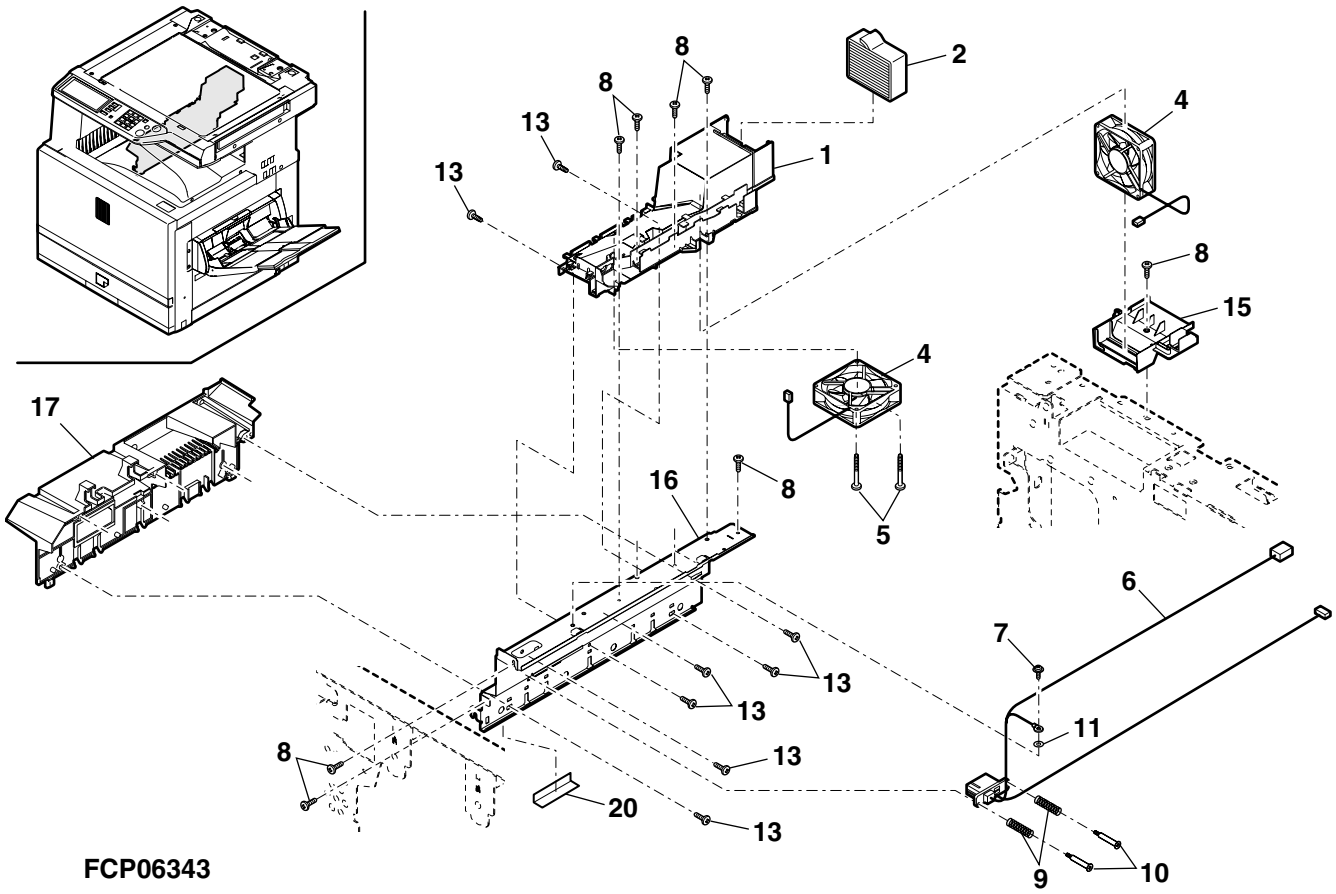

34 ｺﾝﾄﾛｰﾗ BOX(Control box)

NO.	PARTS CODE	PRICE RANK Ex.	PRICE RANK Ja.	NEW MARK	PART RANK	DESCRIPTION
1	CPWBN1549DS54	CU	VW	N	E	ICU PWB (AR-C260S/C260M)[JAPAN] ICU 基板
	CPWBN1549DS55	CV	VZ	N	E	ICU PWB (AR-C260F/C260FP)[JAPAN] ICU 基板
	CPWBN1549DS57	CU	VW	N	E	ICU PWB (AR-C260/C260M)[Except JAPAN] ICU 基板
2	PCOVP1699FCZ1	AN	EQ	N	C	Box cover R ﾎﾞｯｸｽｶﾊﾞｰR
3	LPLTM6025FCZZ	AE	DS	N	C	FFC sheild plate FFC ｼｰﾙﾄﾞﾌﾟﾚｰﾄ
4	PBOX-0131FCZZ	AU	EZ	N	C	Controller BOX ｺﾝﾄﾛ-ﾗ BOX
5	MSPRP3164FCZZ	AD	DJ	N	C	Earth spring ｱｰｽｽﾌﾟﾘﾝｸﾞ
6	XHBSE30P06000	AA	DD		C	Screw(3×6) ﾋﾞｽ
7	PCOVP1697FCZZ	AG	DX	N	C	Box cover F ﾎﾞｯｸｽｶﾊﾞｰF
9	PHOG-0385FCZZ	AB	DD		C	Harness clamp ﾊｰﾈｽｸﾗﾝﾌﾟ
10	PCOVP1698FCZZ	AN	EQ	N	C	Box cover C ﾎﾞｯｸｽｶﾊﾞｰC
11	MSPRP3037FCZZ	AD	DJ	N	C	Controrller spring B ｺﾝﾄﾛｰﾗｰ接地ｽﾌﾟﾘﾝｸﾞ B
12	LSUPP1001ACZZ	AB	DD		C	Supporter(KGPS-4S) ｽﾍﾟｰｻｰ
13	LPLTM6090FCZZ	AE	DJ	N	C	OP connector fixing plate OP ｺﾈｸﾀ取付けﾌﾟﾚｰﾄ
14	PGiDH2016FCZZ	AC	DJ	N	C	Controller guide ｺﾝﾄﾛ-ﾗｶﾞｲﾄﾞ
15	LHLDW1006FCZZ	AA	DD		C	Mini clanp(UAMS-09-0) ﾐﾆｸﾗﾝﾌﾟ
16	LHLDW0429FCZZ	AB	DD		C	Wire saddle(WS-2NS) ﾜｲﾔｰｻﾄﾞﾙ
17	QCNW-0215FCZZ	AZ	FQ	N	C	FAX I/F cable (AR-C260F/C260FP) FAX I/F ｹｰﾌﾞﾙ
18	MSPRP3036FCZZ	AE	DJ	N	C	FAX harness spring (AR-C260F/C260FP) FAX ﾊｰﾈｽ接地ｽﾌﾟﾘﾝｸﾞ
19	XHBSE30P08000	AA	DD		C	Screw(3×8) ﾋﾞｽ
20	XHBSE30P04000	AA	DD		C	Screw(3×4) ﾋﾞｽ
21	DHAi-3465FCZZ	AV	FG	N	C	PRTCFM harness (AR-C260/C260S/C260F) PRTCFM ﾊｰﾈｽ
22	VHi28F322L23F	BH	HC	N	C	ICU FLASH ROM(28F322L23F) (AR-C260F/C260FP) ICU ﾌﾗｯｼｭﾛﾑ
	VHi28F322L22F	BH	HC	N	C	ICU FLASH ROM(28F322L22F) (Other Model) ICU ﾌﾗｯｼｭﾛﾑ

34 ｺﾝﾄﾛｰﾗ BOX(Control box)

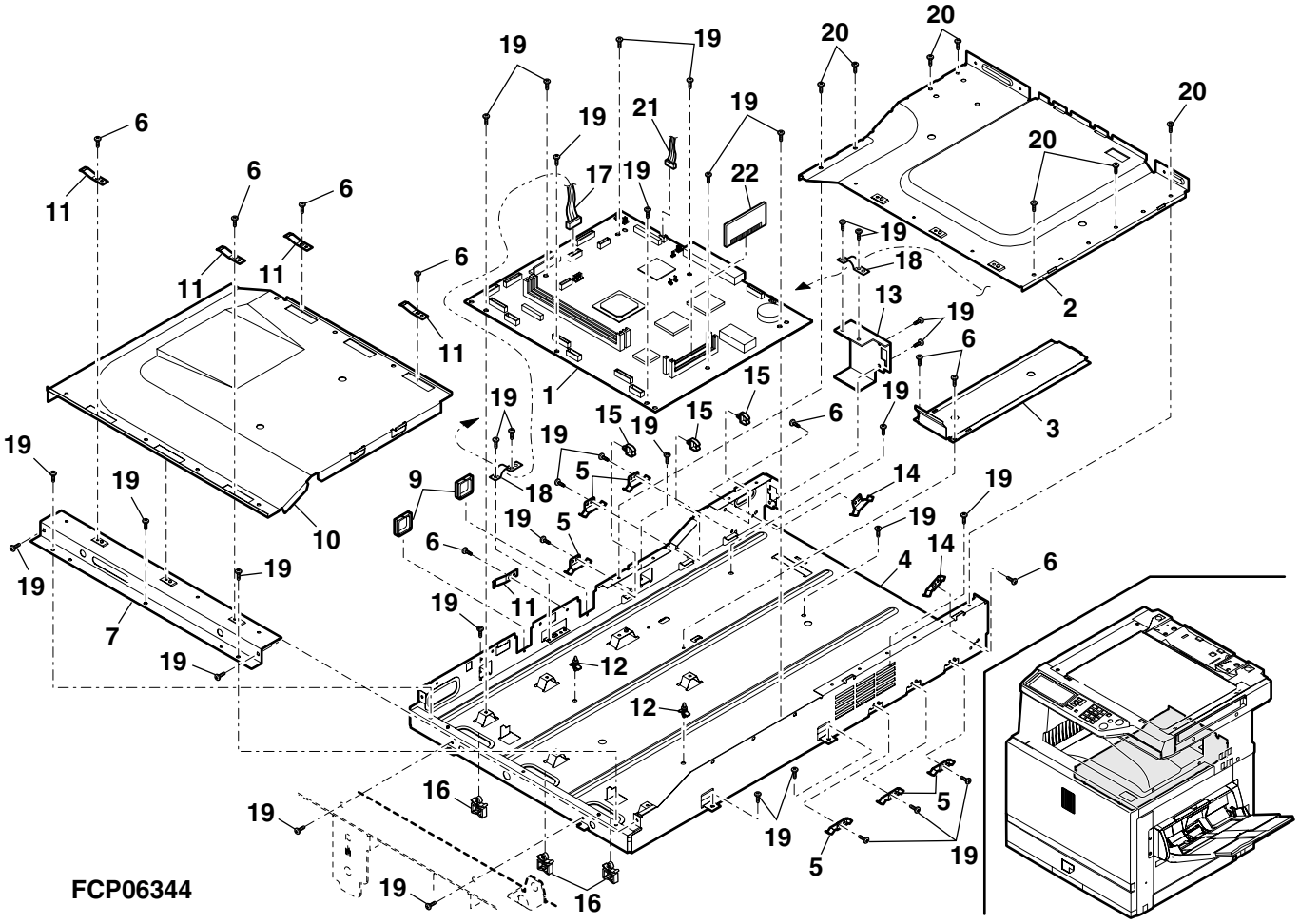

35 配線部 (Wiring section)

NO.	PARTS CODE	PRICE RANK Ex.	PRICE RANK Ja.	NEW MARK	PART RANK	DESCRIPTION	
1	DHAi-3424FC12	AV	FG	N	C	LED head harness	LED ﾍｯﾄﾞﾊｰﾈｽ
2	DHAi-3419FCZZ	AE	DS	N	C	OP-PD harness	OP-PD ﾊｰﾈｽ
3	QCNW-0197FCZZ	AL	EB	N	C	MFP-OP FFC	MFP-OP FFC
4	QCNW-0213FCZZ	AH	DX	N	C	OP-KEY FFC	OP-KEY FFC
5	DHAi-3413FCZZ	AN	EG	N	C	OSM harness	OSM ﾊｰﾈｽ
6	DHAi-3345FC11	AY	FQ	N	C	Delivery harness	排紙ﾊｰﾈｽ
7	DHAi-3361FCZZ	AT	EZ	N	C	MSW harness (100V Series)	MSW ﾊｰﾈｽ
	DHAi-3400FCZZ	AU	EZ	N	C	MSW harness (200V Series)	MSW ﾊｰﾈｽ
8	DHAi-3443FC12	AY	FQ	N	C	MFP-ICU harness	MFP-ICU ﾊｰﾈｽ
9	DHAi-3416FCZZ	AN	EQ	N	C	Driver PWB harness	駆動基板ﾊｰﾈｽ
10	DHAi-3404FCZZ	AR	EQ	N	C	DHSW harness (Japan only)	DHSW ﾊｰﾈｽ
11	DHAi-3405FCZZ	AG	DX	N	C	DH harness (Japan only)	DH ﾊｰﾈｽ
12	DHAi-3410FCZZ	AL	EB	N	C	BLU interface harness	BLU 中継ﾊｰﾈｽ
13	DHAi-3360FCZZ	AU	EZ	N	C	Cassette guide harness	ｶｾｯﾄｶﾞｲﾄﾞﾊｰﾈｽ
14	DHAi-3348FCZZ	AR	EQ	N	C	Multi interface harness	手差し中継ﾊｰﾈｽ
15	QCNW-0211FCZZ	AF	DS	N	C	PCU interface FFC	PCU 間 FFC
16	DHAi-3363FCZZ	AT	EZ	N	C	DC harness	DC ﾊｰﾈｽ
17	LHLDW1223FCZZ	AA	DJ		C	Wire lock holder(White)	ｵﾒｶﾞﾛｯｸ
18	LHLDW1545FCZZ	AB	DJ	N	C	Wire lock holder(Black)	ｵﾒｶﾞﾛｯｸ
19	LBNDJ0043FCZ1	AA	DJ		C	Band	ﾊﾞﾝﾄﾞ
20	DHAi-3426FCZZ	AQ	EG	N	C	FAX AC harness (AR-C260F/C260FP)	FAX AC ﾊｰﾈｽ

35 配線部 (Wiring section)

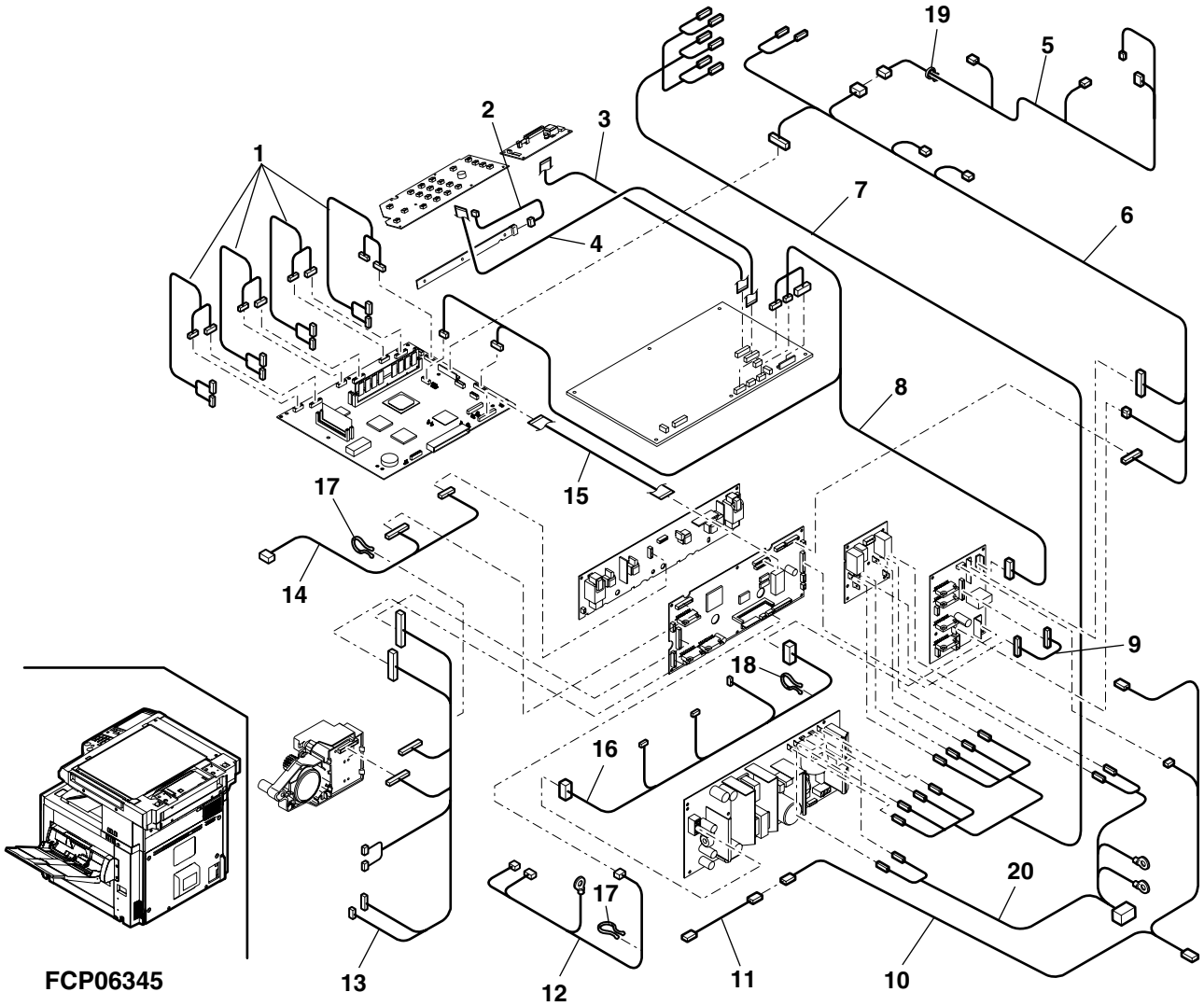

36 梱包材＆付属品 (Packing Material & Accessories)

NO.	PARTS CODE	PRICE RANK Ex.	PRICE RANK Ja.	NEW MARK	PART RANK	DESCRIPTION
1	SPAKC6335DSZZ	BB	GD	N	D	Packing case [Japan](AR-C260S) ﾊﾟｯｷﾝｸﾞｹｰｽ
	SPAKC6383DSZZ	AZ	FQ	N	D	Packing case [Japan](AR-C260F) ﾊﾟｯｷﾝｸﾞｹｰｽ
	SPAKC6383DS11	BF	GN	N	D	Packing case [Japan](AR-C260FP) ﾊﾟｯｷﾝｸﾞｹｰｽ
	SPAKC6334DS12	BU	NN	N	D	Packing case [SRS/SRSSC,Indonesia,STCL](AR-C260) ﾊﾟｯｷﾝｸﾞｹｰｽ
	SPAKC6334DS11	BE	GN	N	D	Packing case [U.S.A Other countries](AR-C260) ﾊﾟｯｷﾝｸﾞｹｰｽ
	SPAKC6335DS11	BE	GN	N	D	Packing case [Japan](AR-C260M) ﾊﾟｯｷﾝｸﾞｹｰｽ
	SPAKC6334DS15	BU	NN	N	D	Packing case [SRS/SRSSC,Indonesia,STCL](AR-C260M) ﾊﾟｯｷﾝｸﾞｹｰｽ
	SPAKC6334DS14	BE	GN	N	D	Packing case [U.S.A Other countries](AR-C260M) ﾊﾟｯｷﾝｸﾞｹｰｽ
2	SPAKA6338FCZZ	AL	EB	N	D	Top packing cushion L [Japan](AR-C260S/C260M) ﾃﾝｱﾄﾞ L
	SPAKA6384FCZZ	AL	EB	N	D	Top packing cushion L [Japan](AR-C260F/C260FP) ﾃﾝｱﾄﾞ L
	SPAKA6336FCZZ	AK	EB	N	D	Top packing cushion L [Except Japan] ﾃﾝｱﾄﾞ L
3	SPAKA6339FCZZ	AN	EQ	N	D	Top packing cushion R [Japan](AR-C260S/C260M) ﾃﾝｱﾄﾞ R
	SPAKA6385FCZZ	AP	EQ	N	D	Top packing cushion R [Japan](AR-C260F/C260FP) ﾃﾝｱﾄﾞ R
	SPAKA6337FCZZ	AN	EG	N	D	Top packing cushion R [Except Japan] ﾃﾝｱﾄﾞ R
4	SSAKZ0018FCZZ	AN	EG		D	Vinyl bag ﾎﾞﾘﾌﾞｸﾛ
5	CPAKA6340FC01	AW	FG	N	D	Bottom packing case unit 底ｹｰｽﾕﾆｯﾄ
7	SPAKA0581YSZZ	AE	DS	N	C	DRCA slleve DRCA ｽﾘｰﾌﾞ
8	SSAKA3640QCZZ	AB	DD		C	Vinyl bag(320×690mm) ﾎﾞﾘﾌﾞｸﾛ
9	DUNT-7255DSZZ	AZ	FQ	N	E	Delivery tray unit (Japan only) 排紙ﾄﾚｲﾕﾆｯﾄ
10	TiNSJ2329FCZZ	BB	GD	N	D	Operation manual(COPY) (Japan only) 取扱説明書(ｺﾋﾟｰ)
	TiNSJ2330FCZZ	BA	FX		D	Operation manual(FAX) (Japan only)[AR-C260F/C260FP] 取扱説明書 (FAX)
	TiNSJ2331FCZZ	AV	FG	N	D	Operation manual(KEY) (Japan only) 取扱説明書(ｷｰ)
	TiNSJ2362FCZZ	AK	EB	N	D	Operation manual(COLOR) (Japan only)[AR-C260M/C260FP] 取扱説明書(ｶﾗｰ)
	TiNSJ2378FCZZ	AS	EQ	N	D	Operation manual(MFP install) (Japan only)[AR-C260M/C260FP] 取扱説明書 (MFP ｲﾝｽﾄｰﾙ)
	TiNSJ2444FCZZ	AM	EG	N	D	Operation manual(S11) (Japan only) 取扱説明書 (S11)
	TiNSE2332FCZZ	BA	FX	N	D	Operation manual(COPY) (English)[U.S.A] 取扱説明書(ｺﾋﾟｰ)
	TiNSE2347FCZZ	AP	EQ	N	D	Operation manual(KEY) (English)[U.S.A] 取扱説明書(ｷｰ)
	TiNSE2363FCZZ	AM	EG	N	D	Operation manual(COLOR) (English)[U.S.A][AR-C260M] 取扱説明書(ｶﾗｰ)
	TiNSE2379FCZZ	AN	EQ	N	D	Operation manual(MFP install) (English)[U.S.A][AR-C260M] 取扱説明書 (MFP ｲﾝｽﾄｰﾙ)
	TiNSE2445FCZZ	AM	EG	N	D	Operation manual(S11) (English)[U.S.A] 取扱説明書 (S11)
	TiNSF2336FCZZ	BA	FX	N	D	Operation manual(COPY) (French)[CANADA] 取扱説明書(ｺﾋﾟｰ)
	TiNSF2351FCZZ	AP	EQ	N	D	Operation manual(KEY) (French)[CANADA] 取扱説明書(ｷｰ)
	TiNSF2367FCZZ	AM	EG	N	D	Operation manual(COLOR) (French)[CANADA][AR-C260M] 取扱説明書(ｶﾗｰ)
	TiNSF2383FCZZ	AN	EQ	N	D	Operation manual(MFP install) (French)[CANADA][AR-C260M] 取扱説明書 (MFP ｲﾝｽﾄｰﾙ)
	TiNSF2449FCZZ	AM	EG	N	D	Operation manual(S11) (French)[CANADA] 取扱説明書 (S11)
	TiNSE2334FCZZ	BB	GD	N	D	Operation manual(COPY) (English)[Other countries] 取扱説明書(ｺﾋﾟｰ)
	TiNSE2349FCZZ	AQ	EQ	N	D	Operation manual(KEY) (English)[Other countries] 取扱説明書(ｷｰ)
	TiNSE2365FCZZ	AM	EG	N	D	Operation manual(COLOR) (English)[Other countries][AR-C260M] 取扱説明書(ｶﾗｰ)
	TiNSE2381FCZZ	AN	EQ	N	D	Operation manual(MFP install) (English)[Other countries][AR-C260M] 取扱説明書 (MFP ｲﾝｽﾄｰﾙ)
	TiNSE2447FCZZ	AM	EG	N	D	Operation manual(S11) (English)[Other countries] 取扱説明書 (S11)
	TiNSE2333GHZZ	*	*	N	D	Operation manual(COPY) (English)[U.Kingdum] 取扱説明書(ｺﾋﾟｰ)
	TiNSE2348GHZZ	*	*	N	D	Operation manual(KEY) (English)[U.Kingdum] 取扱説明書(ｷｰ)
	TiNSE2364GHZZ	*	*	N	D	Operation manual(COLOR) (English)[U.Kingdum][AR-C260M] 取扱説明書(ｶﾗｰ)
	TiNSE2380GHZZ	*	*	N	D	Operation manual(MFP install) (English)[U.Kingdum][AR-C260M] 取扱説明書 (MFP ｲﾝｽﾄｰﾙ)
	TiNSE2446GHZZ	*	*	N	D	Operation manual(S11) (English)[U.Kingdum] 取扱説明書 (S11)
	TiNSE2334GHZZ	*	*	N	D	Operation manual(COPY) (English)[Europe] 取扱説明書(ｺﾋﾟｰ)
	TiNSE2349GHZZ	*	*	N	D	Operation manual(KEY) (English)[Europe] 取扱説明書(ｷｰ)
	TiNSE2365GHZZ	*	*	N	D	Operation manual(COLOR) (English)[Europe][AR-C260M] 取扱説明書(ｶﾗｰ)
	TiNSE2381GHZZ	*	*	N	D	Operation manual(MFP install) (English)[Europe][AR-C260M] 取扱説明書 (MFP ｲﾝｽﾄｰﾙ)
	TiNSE2447GHZZ	*	*	N	D	Operation manual(S11) (English)[Europe] 取扱説明書 (S11)
	TiNSG2341GHZZ	*	*	N	D	Operation manual(COPY) (German) 取扱説明書(ｺﾋﾟｰ)
	TiNSG2356GHZZ	*	*	N	D	Operation manual(KEY) (German) 取扱説明書(ｷｰ)
	TiNSG2372GHZZ	*	*	N	D	Operation manual(COLOR) (German)[AR-C260M] 取扱説明書(ｶﾗｰ)
	TiNSG2388GHZZ	*	*	N	D	Operation manual(MFP install) (German)[AR-C260M] 取扱説明書 (MFP ｲﾝｽﾄｰﾙ)
	TiNSG2454GHZZ	*	*	N	D	Operation manual(S11) (German) 取扱説明書 (S11)
	TiNSF2336GHZZ	*	*	N	D	Operation manual(COPY) (French) 取扱説明書(ｺﾋﾟｰ)
	TiNSF2351GHZZ	*	*	N	D	Operation manual(KEY) (French) 取扱説明書(ｷｰ)
	TiNSF2367GHZZ	*	*	N	D	Operation manual(COLOR) (French)[AR-C260M] 取扱説明書(ｶﾗｰ)
	TiNSF2383GHZZ	*	*	N	D	Operation manual(MFP install) (French)[AR-C260M] 取扱説明書 (MFP ｲﾝｽﾄｰﾙ)
	TiNSF2449GHZZ	*	*	N	D	Operation manual(S11) (French) 取扱説明書 (S11)
	TiNSS2337GHZZ	*	*	N	D	Operation manual(COPY) (Spanish) 取扱説明書(ｺﾋﾟｰ)
	TiNSS2352GHZZ	*	*	N	D	Operation manual(KEY) (Spanish) 取扱説明書(ｷｰ)
	TiNSS2368GHZZ	*	*	N	D	Operation manual(COLOR) (Spanish)[AR-C260M] 取扱説明書(ｶﾗｰ)
	TiNSS2384GHZZ	*	*	N	D	Operation manual(MFP install) (Spanish)[AR-C260M] 取扱説明書 (MFP ｲﾝｽﾄｰﾙ)
	TiNSS2450GHZZ	*	*	N	D	Operation manual(S11) (Spanish) 取扱説明書 (S11)
	TiNSi2338GHZZ	*	*	N	D	Operation manual(COPY) (Italian) 取扱説明書(ｺﾋﾟｰ)
	TiNSi2353GHZZ	*	*	N	D	Operation manual(KEY) (Italian) 取扱説明書(ｷｰ)
	TiNSi2369GHZZ	*	*	N	D	Operation manual(COLOR) (Italian)[AR-C260M] 取扱説明書(ｶﾗｰ)
	TiNSi2385GHZZ	*	*	N	D	Operation manual(MFP install) (Italian)[AR-C260M] 取扱説明書 (MFP ｲﾝｽﾄｰﾙ)

36 梱包材＆付属品 (Packing Material & Accessories)

NO.	PARTS CODE	PRICE RANK Ex.	PRICE RANK Ja.	NEW MARK	PART RANK	DESCRIPTION
10	TiNSi2451GHZZ	*	*	N	D	Operation manual(S11) (Italian) 取扱説明書 (S11)
	TiNSH2339GHZZ	*	*	N	D	Operation manual(COPY) (Dutch) 取扱説明書 (ｺﾋﾟｰ)
	TiNSH2354GHZZ	*	*	N	D	Operation manual(KEY) (Dutch) 取扱説明書 (ｷｰ)
	TiNSH2370GHZZ	*	*	N	D	Operation manual(COLOR) (Dutch)[AR-C260M] 取扱説明書 (ｶﾗｰ)
	TiNSH2386GHZZ	*	*	N	D	Operation manual(MFP install) (Dutch)[AR-C260M] 取扱説明書 (MFP ｲﾝｽﾄｰﾙ)
	TiNSH2452GHZZ	*	*	N	D	Operation manual(S11) (Dutch) 取扱説明書 (S11)
	TiNSW2340GHZZ	*	*	N	D	Operation manual(COPY) (Swedish) 取扱説明書 (ｺﾋﾟｰ)
	TiNSW2355GHZZ	*	*	N	D	Operation manual(KEY) (Swedish) 取扱説明書 (ｷｰ)
	TiNSW2371GHZZ	*	*	N	D	Operation manual(COLOR) (Swedish)[AR-C260M] 取扱説明書 (ｶﾗｰ)
	TiNSW2387GHZZ	*	*	N	D	Operation manual(MFP install) (Swedish)[AR-C260M] 取扱説明書 (MFP ｲﾝｽﾄｰﾙ)
	TiNSW2453GHZZ	*	*	N	D	Operation manual(S11) (Swedish) 取扱説明書 (S11)
	TiNSZ2342GHZZ	*	*	N	D	Operation manual(COPY) (Norwegian) 取扱説明書 (ｺﾋﾟｰ)
	TiNSZ2357GHZZ	*	*	N	D	Operation manual(KEY) (Norwegian) 取扱説明書 (ｷｰ)
	TiNSZ2373GHZZ	*	*	N	D	Operation manual(COLOR) (Norwegian)[AR-C260M] 取扱説明書 (ｶﾗｰ)
	TiNSZ2389GHZZ	*	*	N	D	Operation manual(MFP install) (Norwegian)[AR-C260M] 取扱説明書 (MFP ｲﾝｽﾄｰﾙ)
	TiNSZ2455GHZZ	*	*	N	D	Operation manual(S11) (Norwegian) 取扱説明書 (S11)
	TiNSZ2343GHZZ	*	*	N	D	Operation manual(COPY) (Finnish) 取扱説明書 (ｺﾋﾟｰ)
	TiNSZ2358GHZZ	*	*	N	D	Operation manual(KEY) (Finnish) 取扱説明書 (ｷｰ)
	TiNSZ2374GHZZ	*	*	N	D	Operation manual(COLOR) (Finnish)[AR-C260M] 取扱説明書 (ｶﾗｰ)
	TiNSZ2390GHZZ	*	*	N	D	Operation manual(MFP install) (Finnish)[AR-C260M] 取扱説明書 (MFP ｲﾝｽﾄｰﾙ)
	TiNSZ2456GHZZ	*	*	N	D	Operation manual(S11) (Finnish) 取扱説明書 (S11)
	TiNSD2344GHZZ	*	*	N	D	Operation manual(COPY) (Danish) 取扱説明書 (ｺﾋﾟｰ)
	TiNSD2359GHZZ	*	*	N	D	Operation manual(KEY) (Danish) 取扱説明書 (ｷｰ)
	TiNSD2375GHZZ	*	*	N	D	Operation manual(COLOR) (Danish)[AR-C260M] 取扱説明書 (ｶﾗｰ)
	TiNSD2391GHZZ	*	*	N	D	Operation manual(MFP install) (Danish)[AR-C260M] 取扱説明書 (MFP ｲﾝｽﾄｰﾙ)
	TiNSD2457GHZZ	*	*	N	D	Operation manual(S11) (Danish) 取扱説明書 (S11)
	CCADZ1561FC01	AK	DX		D	Maintenance card (Japan) ﾒﾝﾃﾅﾝｽｶｰﾄﾞ
	CCADZ1518FC01	AB	DJ		D	Maintenance card (Except Japan) ﾒﾝﾃﾅﾝｽｶｰﾄﾞ
	TCADZ6017FCZZ	AF	DS	N	D	MSDS card (U.S.A,Canada) MSDS ｶｰﾄﾞ
	TCADZ6017GHZZ	*	*	N	D	MSDS card (English)[Europe] MSDS ｶｰﾄﾞ
	PSHEP5013FCZ1	*	*	N	D	Key sheet (French) ｷｰｼｰﾄ
	PSHEP5013FCZZ	*	*	N	D	Key sheet (German) ｷｰｼｰﾄ
	PSHEP5013FCZ2	*	*	N	D	Key sheet (Spanish) ｷｰｼｰﾄ
	PSHEP5013FCZ3	*	*	N	D	Key sheet (Italian) ｷｰｼｰﾄ
	PSHEP5013FCZ4	*	*	N	D	Key sheet (Dutch) ｷｰｼｰﾄ
	PSHEP5013FCZ5	*	*	N	D	Key sheet (Swedish) ｷｰｼｰﾄ
	PSHEP5013FCZ6	*	*	N	D	Key sheet (Norwegian) ｷｰｼｰﾄ
	PSHEP5013FCZ7	*	*	N	D	Key sheet (Finnish) ｷｰｼｰﾄ
	PSHEP5013FCZ8	*	*	N	D	Key sheet (Danish) ｷｰｼｰﾄ
	TCADS1512FCZZ	AB	DJ		D	Supply set up card (Australia,New Zealand) 納入設置報告書
	TCADS1511FCZZ	AC	DJ		D	Supply set up card (Europe) 納入設置報告書
	CDSKA0014FC31	AT	EZ	N	D	CD-ROM (AR-C260M/C260FP)[Japan] CD-ROM
	CDSKA0014FC32	AT	EZ	N	D	CD-ROM (AR-C260M)[U.S.A other countries] CD-ROM
	CDSKA0014GH35	*	*	N	D	CD-ROM (AR-C260M)[Europe] CD-ROM
	CDSKA0014FC35	AT	EZ	N	D	CD-ROM (AR-C260M)[Yenen,Saudi Arabia, Oman,Qutar,Bahrain,Kuwait,UAE] CD-ROM
	CDSKA0002QS33	AP	EQ	N	D	NIC CD-ROM (AR-C260M/C260FP)[Except Europe] NIC CD-ROM
	CDSKA0002TS33	*	*	N	D	NIC CD-ROM (AR-C260M)[Europe] NIC CD-ROM
	UKOG-0304FCZZ	AQ	EQ	N	D	Color chart (AR-C260M/C260FP) ｶﾗｰﾁｬｰﾄ
11	QACCJ6912QCPZ	AV	FG	N	B	AC cord (Japan,Philippines) AC ｺｰﾄﾞ
	QACCD7912QCPZ	AS	EQ	N	B	AC cord (U.S.A,Canada) AC ｺｰﾄﾞ
	QACCL7922QCPZ	AN	EQ	N	B	AC cord (Australia,New zealand) AC ｺｰﾄﾞ
	QACCB7626QCPZ	*	*	N	B	AC cord (U.Kingdom) AC ｺｰﾄﾞ
	QACCE6922QCPZ	AQ	EQ	N	B	AC cord (SEEG,STCL) AC ｺｰﾄﾞ
	DHAi-3332DSZZ	BB	GD	N	B	AC cord (SRS/SRSSC,Indonesia) AC ｺｰﾄﾞ
	DHAi-3332DS11	BB	GD	N	B	AC cord (India) AC ｺｰﾄﾞ
	QACCB7623QCZZ	BB	GD	N	B	AC cord (Other countries) AC ｺｰﾄﾞ
12	SPAKA6346FCZZ	AD	DJ	N	D	Accesories spacer (Japan only) 付属品ｽﾍﾟｰｻｰ
13	SSAKA2440QCZZ	AB	DD		D	Vinyl bag(280×410mm) ﾎﾞﾘﾌﾞｸﾛ
14	LX-BZ0555FCZZ	AB	DD		D	Screw DVS 取付けﾋﾞｽ
15	TCADZ1178FCZZ	AB	DJ		D	Screw remove caution tag ﾋﾞｽ開梱注意ｶｰﾄﾞ
16	LX-WZ0326FCZZ	AA	DD		D	MB cushion B9 MB ｸｯｼｮﾝ B9
17	SPAKA6302FCZ1	AD	DJ	N	D	Packing add 転写固定材
18	SPAKA4693FCZZ	AE	DS		D	Packing add OC [Japan](AR-C260S) OC 保護材
21	SSAKA5003CCZZ	AA	DD		C	Vinyl bag(140×260mm) ﾎﾞﾘﾌﾞｸﾛ
22	SPAKA6075FCZZ	AE	DJ	N	D	RSPF protect sheet [Japan](AR-C260F/C260FP) RSPF 保護ｼｰﾄ
	SPAKA6450FCZZ	AD	DJ	N	D	OC protect sheet (Other Model) OC 保護ｼｰﾄ
24	TCADZ1275FCZZ	AB	DJ		D	Cassette rotation plate caution tag ｶｾｯﾄ回転板注意ｶｰﾄﾞ
25	LHLDW1226FCZZ	AB	DJ		C	Turn fastener ﾀｰﾝﾌｧｽﾅｰ
26	SPAKA6345FCZZ	AE	DJ	N	D	Scanner reinforce add ｽｷｬﾅｰ補強材
27	QCNW-7197XCZZ	AH	DX		C	Line cable [Japan](AR-C260F/C260FP) ﾗｲﾝｹｰﾌﾞﾙ
28	RCORF0046FCZZ	AH	DX	N	C	Ferrite core [Japan](AR-C260F/C260FP) ﾌｪﾗｲﾄｺｱ
29	SSAKH3013CCZZ	AA	DD		C	Vinyl bag(120×220mm) [Japan](AR-C260F/C260FP) ﾎﾞﾘﾌﾞｸﾛ
30	SSAKA0006UCZZ	AA	DD		C	Vinyl bag(50×60mm) ﾎﾞﾘﾌﾞｸﾛ

36 梱包材＆付属品 (Packing Material & Accessories)

NO.	PARTS CODE	PRICE RANK Ex.	PRICE RANK Ja.	NEW MARK	PART RANK	DESCRIPTION
31	XBBSE40P06000	AA	DD		C	Screw(4×6) [Japan](AR-C260F/C260FP) ﾋﾞｽ
32	MLEVP0864FCZZ	AD	DJ	N	C	Full actuator FU 満杯ｱｸﾁｭｴｰﾀ FU
101	TCADZ6015FCZZ	AC	DJ	N	D	Set up card 設置手順書
102	SPAKA6440FCZZ	AL	EB	N	D	Scanner reinforce slleve (AR-C260F/C260FP) ｽｷｬﾅｰ補強ｽﾘｰﾌﾞ
103	SPAKA6386FCZZ	AL	EB	N	D	ADF spacer (AR-C260F/C260FP) ADF ｽﾍﾟｰｻｰ
104	SPAKA6235DSZZ	AH	DX	N	D	Joint C (AR-C260F/C260FP) ｼﾞｮｲﾝﾄ C
105	TCADZ1593FCZZ	AC	DJ	N	D	Process insert inst card ﾌﾟﾛｾｽ挿入手順書
106	GCÕVZ0237FCZZ	AZ	FQ	N	D	Dust cover (Yenen,Saudi Arabia, Oman,Qutar,Bahrain,Kuwait,UAE) ﾀﾞｽﾄｶﾊﾞｰ

36 梱包材＆付属品 (Packing Material & Accessories)

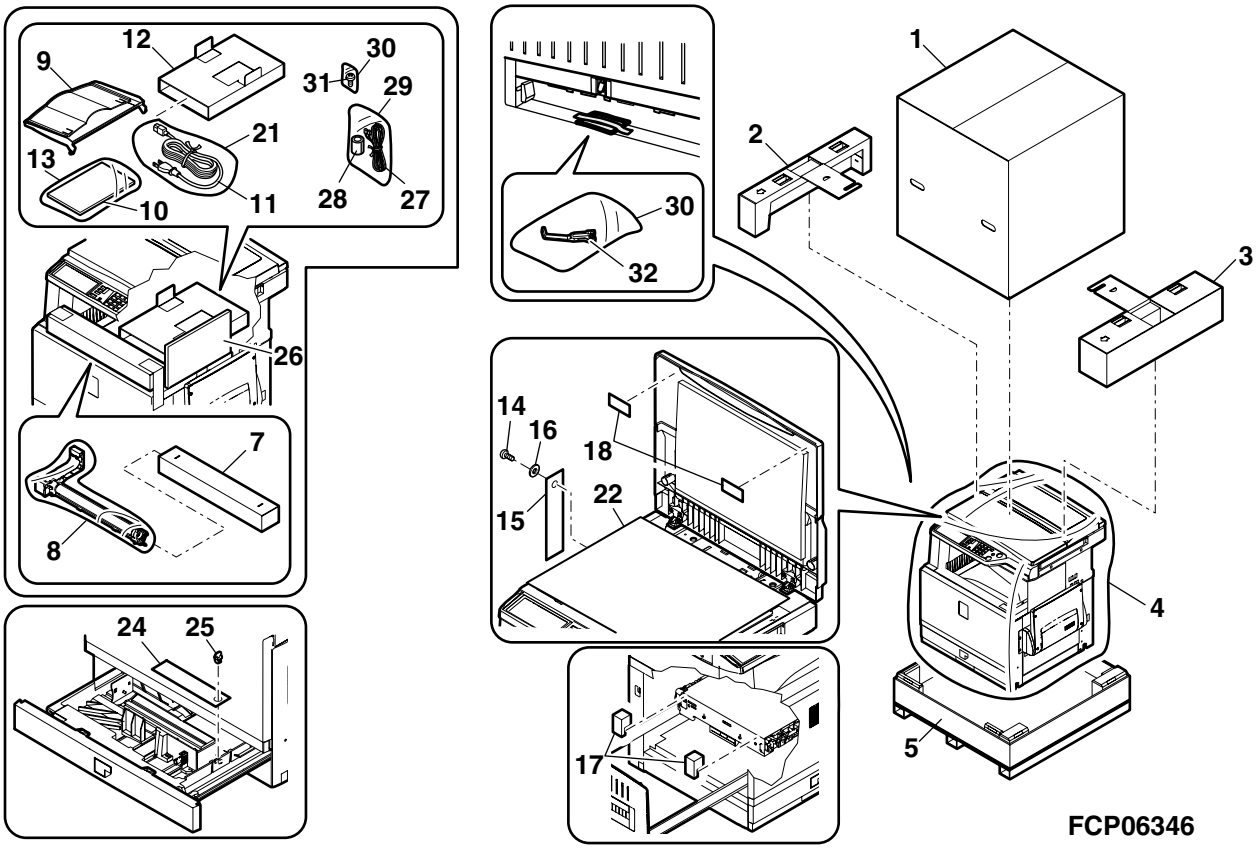

37 FAX BOX unit(AR-C260F/AR-C260FP)

NO.	PARTS CODE	PRICE RANK Ex.	PRICE RANK Ja.	NEW MARK	PART RANK	DESCRIPTION	
1	PCOVP1564FCZZ	AF	DS		D	FAX ROM cover	FAX ROM ｶﾊﾞｰ
2	GCAB-0947FCZZ	AT	EZ		D	FAX rear cabinet	FAX 後ｷｬﾋﾞ
3	LHLDZ1494FCZZ	AF	DS		C	FAX AC cord holder B	FAX AC ｺｰﾄﾞﾎﾙﾀﾞ－B
4	LFiX-0567FCZZ	AD	DJ		C	FAX holder cord fixing plate	FAX ﾎﾙﾀﾞｰｺｰﾄﾞ押え
5	DHAi-3441FCZZ	AV	FG	N	C	FAX power supply harness	FAX 電源ﾊｰﾈｽ
6	LHLDZ1493FCZZ	AF	DS		C	FAX AC cord holder C	FAX AC ｺｰﾄﾞﾎﾙﾀﾞｰC
7	XEBSE30P12000	AA	DD		C	Screw(3×12)	ﾋﾞｽ
8	XEBSE30P10000	AA	DD		C	Screw(3×10)	ﾋﾞｽ
9	XBPSD40P06K00	AA	DD		C	Screw(4×6K)	ﾋﾞｽ
10	XBPSD40P40XS0	AA	DD		C	Screw(4x40XS)	ﾋﾞｽ
11	RDENC0004FCZZ	BV	RB		E	FAX AC power supply unit	FAX AC 電源基板
12	LBSHZ1001ACZZ	AB	DD		C	Edge saddle	ｴｯｼﾞｻﾄﾞﾙ
13	XHBSE30P06000	AA	DD		C	Screw(3×6)	ﾋﾞｽ
14	LPLTM5788FCZZ	AP	EQ		C	FAX power supply fixing plate	FAX 電源取付板
15	QSW-C9295QCZZ	AL	EB		B	FAX power supply switch(ALP SDDJF3)	FAX 電源ｽｲｯﾁ
16	LBSHZ2050SCZZ	AB	DD		C	Edge saddle(EDS-1208U)	ｴｯｼﾞｻﾄﾞﾙ
17	LX-WZ0443FCZZ	AB	DD		C	Washer	ｱｰｽ用ﾋﾗﾜｯｼｬｰ
18	LSUPP0118FCZZ	AB	DJ		C	PWB supporter(SPLSN6)	基板ｻﾎﾟｰﾀｰ
19	LHLDW1499FCZZ	AC	DJ		C	Wire saddle(WS-2U)	ﾜｲﾔｰｻﾄﾞﾙ
20	LSUPP0076FCZZ	AA	DD		C	PWB supporter(SPSN6U)	基板ｻﾎﾟｰﾀｰ
21	XBPSD30P08KS0	AA	DD		C	Screw(3x8KS)	ﾋﾞｽ
22	LPLTM5892FCZZ	AD	DJ		C	FAX separate plate	FAX 仕切り板
23	LFiX-0560FCZZ	AF	DS		C	FAX AC cord fixing plate	FAX AC ｺｰﾄﾞ押え
24	PSHEZ4933FCZZ	AD	DJ		C	FAX MD cover sheet	FAX MD ｶﾊﾞｰｼｰﾄ
25	DHAi-3207FC11	AG	DX	N	C	FAX switch harness	FAX ｽｲｯﾁﾊｰﾈｽ
26	DHAi-3204FC11	AM	EG	N	C	FAX BOX harness	FAX BOX ﾊｰﾈｽ
27	GCAB-0946FCZ2	AZ	FQ		D	FAX front cabinet B	FAX 前ｷｬﾋﾞ B
28	LPLTM6075FCZ1	AS	EQ	N	C	FAX fixing plate N	FAX 取付板 N
29	LPLTM6108FCZZ	AF	DS	N	C	FAX fixing plate B	FAX 取付板 B
30	LPLTM5789FCZZ	AF	DS		C	Speaker fixing plate	ｽﾋﾟｰｶｰ取付板
31	DUNT-7136FCA1	AN	EQ	N	E	FAX speaker unit	FAX ｽﾋﾟｰｶｰﾕﾆｯﾄ
32	XHBSE40P05000	AB	DD		C	Screw(4×5)	ﾋﾞｽ
33	PSHEZ4879FCZZ	AH	DX		C	FAX front sheet	FAX 前ｼｰﾄ
34	CPWBN1491FCE1	CA	TV		E	TEL/LIU PWB	TEL/LIU 基板
35	LPLTM5787FCZZ	AQ	EQ		C	FAX PWB fixing plate	FAX 基板取付板
36	CPWBN1472FCE4	CG	UM		E	Modem control PWB	ﾓﾃﾞﾑｺﾝﾄﾛｰﾙ基板
37	QCNW-0210FCZZ	AE	DJ		C	FAX interface FFC	FAX 中継 FFC
38	VHi28F082L06S	BF	GN	N	E	FAX FLASH ROM(28F082L06S)	FAX ﾌﾗｯｼｭﾛﾑ
39	DHAi-3206FC11	AG	DX	N	C	CIP interface harness	CIP ﾁｭｳｹｲﾊｰﾈｽ
40	LX-BZ0962FCZ1	AF	DS	N	C	Screw	ﾋﾞｽ
41	LHLDW2087SCZZ	AA	DD	N	C	Mini clanp	ﾐﾆｸﾗﾝﾌﾟ
42	XBPSE26P08000	AA	DD		C	Screw(2.6×8)	ﾋﾞｽ
43	LX-BZ0938FCZZ	AC	DD		C	Screw	ﾋﾞｽ
44	XWHSE30-05080	AA	DD		C	Washer	ﾋﾗ ﾜｯｼｬ
45	NSFTZ2738FCZZ	AD	DJ	N	C	FAX fixing shaft	FAX 取付ｼｬﾌﾄ
46	XHBSE40P08000	AA	DD		C	Screw(4×8)	ﾋﾞｽ
47	XHBSE40P10000	AA	DD		C	Screw(4×10)	ﾋﾞｽ
501	CPLTM5788FCE4	BS	MW	N	E	FAX power supply unit	FAX 電源ﾕﾆｯﾄ

37 FAX BOX unit(AR-C260F/AR-C260FP)

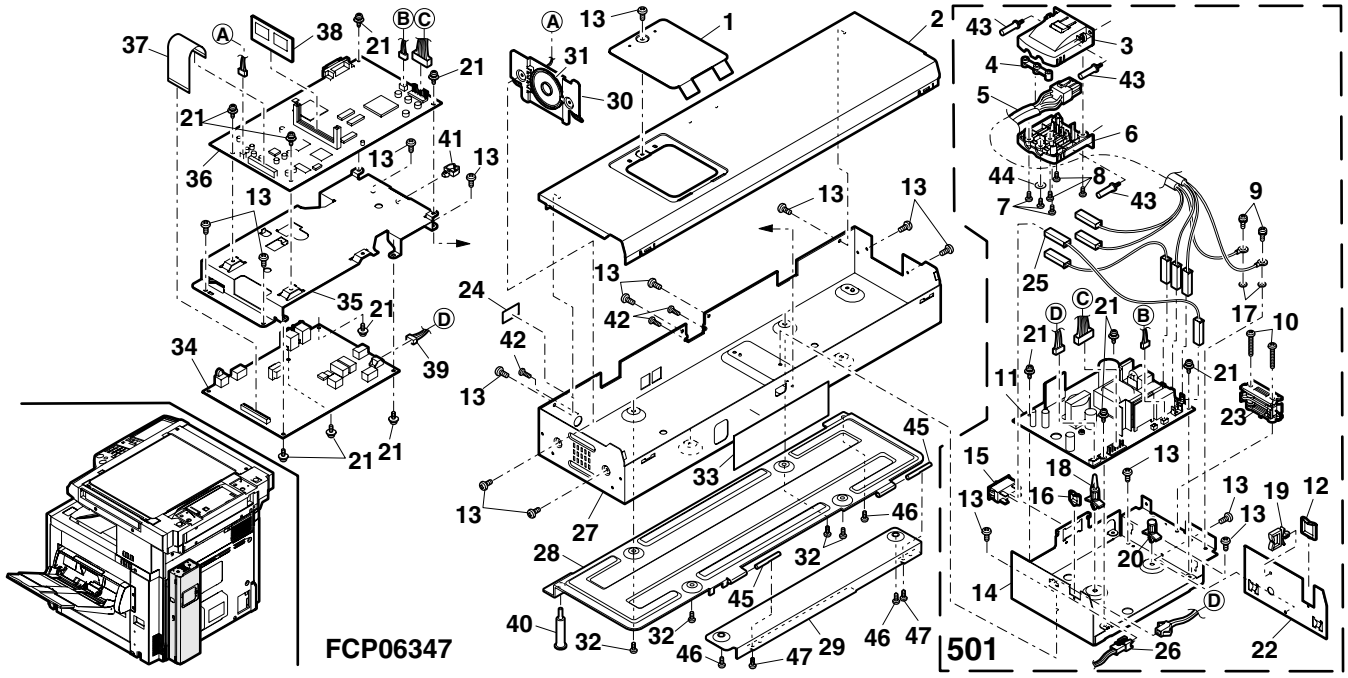

38 ﾌﾟﾘﾝﾀｺﾝﾄﾛｰﾗｰ部 (Printer controler section)[AR-C260M/AR-C260FP]

NO.	PARTS CODE	PRICE RANK Ex.	PRICE RANK Ja.	NEW MARK	PART RANK	DESCRIPTION	
1	XHBSD30P06000	AA	DD		C	Screw(3×6)	ﾋﾞｽ
2	MSPRP3168FCZZ	AC	DJ	N	C	HDD spring	HDD ｽﾌﾟﾘﾝｸﾞ
3	LX-BZ1022LCZZ	AB	DD		C	Screw	ﾋﾞｽ
4	XBPSE30P06000	AA	DD		C	Screw(3×6)	ﾋﾞｽ
5	DUNT-7269FCZZ	CD	UD		E	HDD	HDD
6	LPLTM6028FCZZ	AL	EB	N	C	HDD fixing plate	HDD 取付けﾌﾟﾚｰﾄ
7	DHAi-3454FCZZ	AK	DX	N	C	HDD P/S harness	HDD 電源ﾊｰﾈｽ
8	DHAi-3453FCZZ	AV	FG	N	C	HDD IDE harness	HDD IDE ﾊｰﾈｽ
9	CPWBN1534DS52	BP	LP	N	E	HDD PWB	HDD 基板
10	XHBSD30P05000	AA	DD		C	Screw(3×5)	ﾋﾞｽ
11	LBNDJ0016FCZZ	AA	DD		C	Band	ﾊﾞﾝﾄﾞ
12	CPWBN1521DS51	BM	HR	N	E	SCN IF PWB	SCN IF PWB
14	LX-BZ0963FCZZ	AF	DS	N	C	Screw	ﾋﾞｽ
15	XHBSD30P08000	AA	DD		C	Screw(3×8)	ﾋﾞｽ
16	CPWBN1518DS55	EB	ZZ	N	E	Printer controler PWB	ﾌﾟﾘﾝﾀｺﾝﾄﾛｰﾗｰ基板
17	LPLTM5977FCZZ	AS	EQ	N	C	Controler PWB fixing plate	ｺﾝﾄﾛｰﾗ基板取付け板
19	LX-BZ0855FCZZ	AC	DD		C	Tension spring screw	ﾃﾝｼｮﾝｽﾌﾟﾘﾝｸﾞ段ﾋﾞｽ
22	VHi28F322L33F	BM	HR	N	E	Flash ROM KANJI [Japan only]	ﾌﾗｯｼｭ ROM 漢字
23	VHi28F322L32F	BG	GT	N	E	Flash ROM PCL	ﾌﾗｯｼｭ ROM PCL
24	VHi28F081L11F	AY	FQ	N	E	Flash ROM BOOT	ﾌﾗｯｼｭ ROM BOOT
25	NFANP0071FCZZ	AZ	FX	N	B	Fan	ﾌｧﾝ
26	LHLDZ1547FCZZ	AD	DJ	N	C	Fan holder	ﾌｧﾝﾎﾙﾀﾞｰ
27	XHBSE30P06000	AA	DD		C	Screw(3×6)	ﾋﾞｽ
28	LX-BZ0901FCZZ	AC	DD		C	Screw	ﾋﾞｽ

38 ﾌﾟﾘﾝﾀｺﾝﾄﾛｰﾗｰ部 (Printer controler section)[AR-C260M/AR-C260FP]

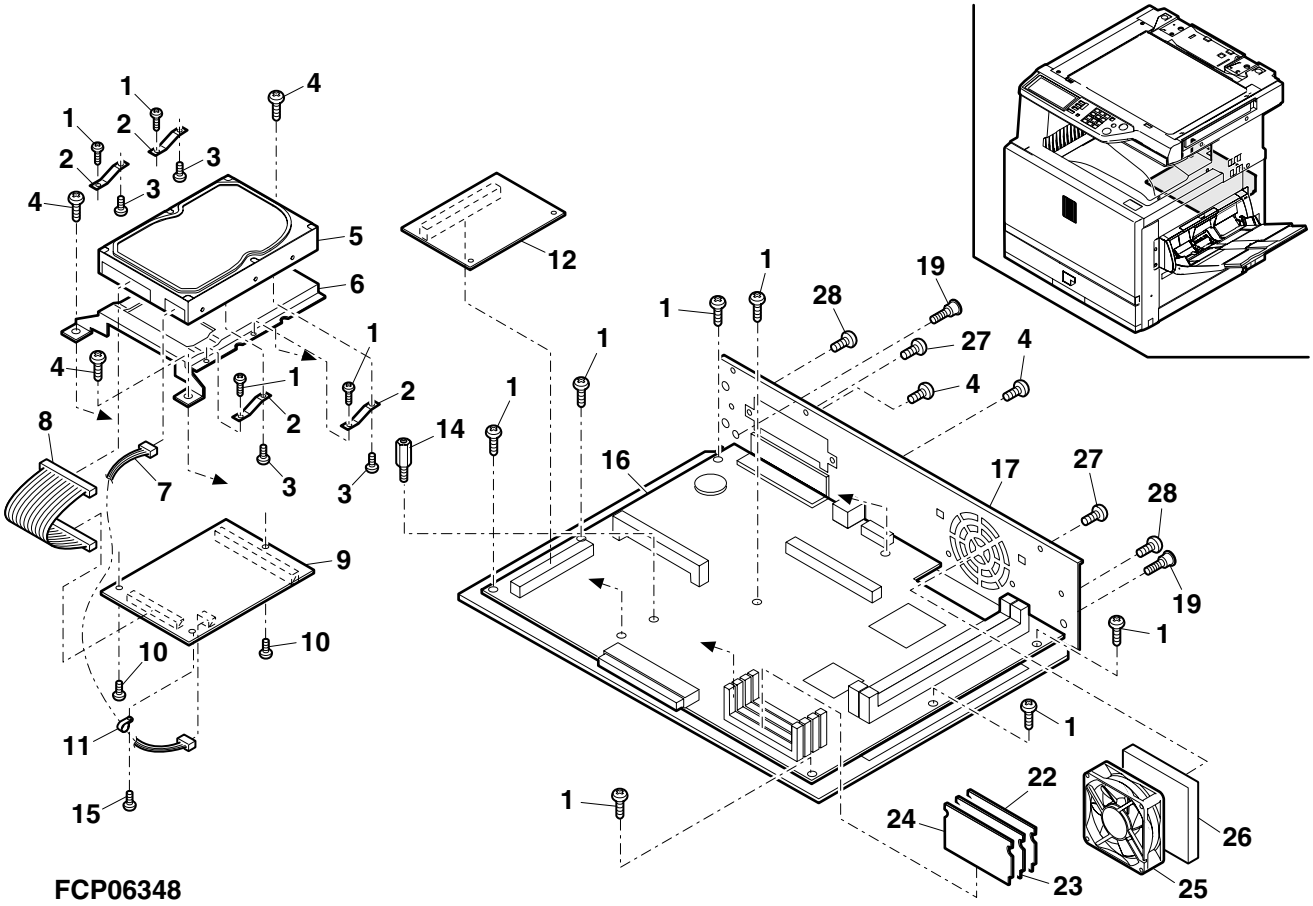

39 RADF 外装部 (RADF Exteriors)[AR-C260F/AR-C260FP]

NO.	PARTS CODE	PRICE RANK Ex.	PRICE RANK Ja.	NEW MARK	PART RANK	DESCRIPTION	
1	0CW2269P068//	AK	DX	N	C	Tray guide F	ﾄﾚｲｶﾞｲﾄﾞ F
3	0CW040100FNiT	AB	DJ	N	C	Screw(M4IT)	ﾋﾞｽ
4	0CW2269P004//	BB	GD	N	C	Paper feeding tray	給紙ﾄﾚｲ
5	0CW2268P084//	AF	DS	N	C	Tray rack gear	ﾄﾚｲﾗｯｸｷﾞﾔ
6	0CW2269P069//	AK	DX	N	C	Tray guide R	ﾄﾚｲｶﾞｲﾄﾞ R
7	0CW2269P077//	AL	EB	N	C	Tray sensor lever	ﾄﾚｲｾﾝｻｰﾚﾊﾞｰ
8	0CWE314000619	AH	DX		B	Photo interrupter	ﾌｫﾄｲﾝﾀﾗﾌﾟﾀｰ
9	0CW660580////	AA	DD		C	Nut	ﾅｯﾄ
10	0CW2268P085//	AE	DJ	N	C	Tray pinion gear	ﾄﾚｲﾋﾟﾆｵﾝｷﾞﾔ
11	0CW2268P170//	AE	DS	N	C	Tray spring	ﾄﾚｲｲﾀﾊﾞﾈ
12	0CW2269K032//	CB	TZ	N	E	Paper feeding unit	給紙ﾕﾆｯﾄ
13	0CW2214P128B/	AK	DX	N	C	Slide switch bracket	ｽﾗｲﾄﾞｽｲｯﾁﾌﾞﾗｹｯﾄ
14	0CW2185P357A/	AA	DJ		C	Screw(M3×8)	ﾋﾞｽ
15	0CW2269K232//	AY	FQ	N	B	Harness	ﾊｰﾈｽ
16	0CW2269P003//	BA	FX	N	C	Rrar cover	ﾘﾔｶﾊﾞｰ
17	0CW040080FNBi	AA	DD		C	Screw	ﾋﾞｽ
18	0CW2269P009//	AP	EQ	N	C	Rear sub cover	ﾘﾔｻﾌﾞｶﾊﾞｰ
19	0CW2158P322A/	AC	DJ	N	C	Screw	ﾋﾞｽ
20	0CW2269P365//	AV	FG	N	C	Rrar cover sound proof cushion 1	ﾘｱｶﾊﾞｰ防音ｽﾎﾟﾝｼﾞ 1
21	0CW2269P366//	AS	EQ	N	C	Rrar cover sound proof cushion 2	ﾘｱｶﾊﾞｰ防音ｽﾎﾟﾝｼﾞ 2
23	0CW2269P002//	AX	FQ	N	C	Front cover	ﾌﾛﾝﾄｶﾊﾞｰ
24	0CW2269P381//	AL	EB	N	C	LED label	LED ﾗﾍﾞﾙ
25	0CW2269K207//	AH	DX	N	E	LED PWB	LED ｷﾊﾞﾝ
26	0CW4054P220D/	AB	DJ		C	Screw	ﾋﾞｽ
27	0CW040080FZTP	AA	DD		C	Screw(M4×8)	ﾋﾞｽ
28	0CW2269K066//	BY	TF	N	D	Reverse unit	反転ﾕﾆｯﾄ
29	0CW030060FZWS	AA	DD		C	Screw	ﾋﾞｽ
501	0CW2269K064//	BG	GT	N	D	Tray unit	ﾄﾚｲﾕﾆｯﾄ

39 RADF 外装部 (RADF Exteriors)[AR-C260F/AR-C260FP]

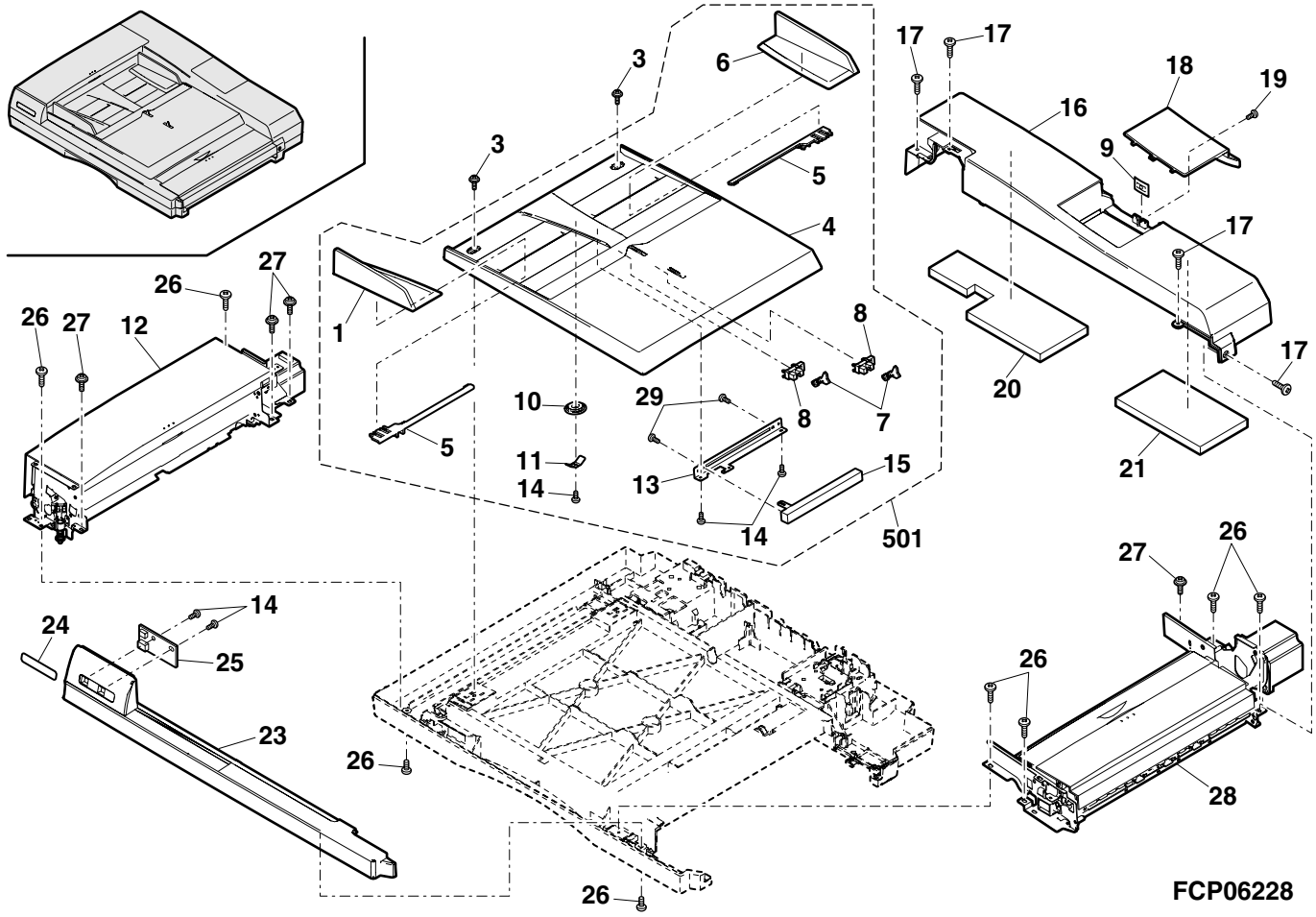

40 RADF 給紙部 1 (RADF Paper feeding section 1)[AR-C260F/AR-C260FP]

NO.	PARTS CODE	PRICE RANK Ex.	PRICE RANK Ja.	NEW MARK	PART RANK	DESCRIPTION	
1	0CW2269P133//	AG	DX	N	C	Paper feeding bracket R	給紙ｼﾃﾝﾌﾞﾗｹｯﾄ R
2	0CW2254P494A/	AB	DJ	N	C	Screw(M4×8)	ﾋﾞｽ
3	0CW2268P057//	AE	DJ	N	C	Resist arm R	ﾚｼﾞｱｰﾑ R
4	0CW2269P368//	AF	DS	N	C	Reverse cover seal cushion F	反転ｶﾊﾞｰｼｰﾙｽﾎﾟﾝｼﾞ F
5	0CW2269P362//	AD	DJ	N	C	Stopper cushion	ﾋﾟｯｸｽﾄｯﾊﾟｰｽﾎﾟﾝｼﾞ
6	0CW2269P054D/	AE	DS	N	C	Shutter	ｼｬｯﾀｰ
7	0CW2269P350//	AD	DJ	N	C	Shutter cushion	ｼｬｯﾀｰｽﾎﾟﾝｼﾞ
8	0CW2269P139//	AE	DS	N	C	Bracket	ﾌﾞﾝﾘﾌﾞﾗｹｯﾄ
10	0CW2269P364//	AF	DS	N	C	Paper feeding cover seal cushion	給紙ｶﾊﾞｰｼｰﾙｽﾎﾟﾝｼﾞ
11	0CW2268P056//	AE	DJ	N	C	Resist arm F	ﾚｼﾞｱｰﾑ F
12	0CW2269P132//	AE	DS	N	C	Paper feeding bracket F	給紙ｼﾃﾝﾌﾞﾗｹｯﾄ F
13	0CW2269P007//	AZ	FQ	N	D	Paper feeding opening/closing cover	給紙開閉ｶﾊﾞｰ
14	0CW2269P301//	AV	FG	N	B	Paper feeding roller	給紙ﾛｰﾗｰ
15	0CW2269P361//	AD	DJ	N	C	Ring 5	ﾋﾟｱｽﾘﾝｸﾞ 5
16	0CW2252P620C/	AD	DJ	N	C	Clip 4	ｸﾘｯﾌﾟ 4
18	0CW2269P052//	AD	DJ	N	C	Shutter stopper	ｼｬｯﾀｰｽﾄｯﾊﾟｰ
19	0CW2225P312A/	AD	DJ	N	C	Bearing	ｼﾞｸｳｹ
20	0CWER050SKP//	AA	DD	N	C	E-ring 5	E ﾘﾝｸﾞ 5
21	0CW2269P341B/	AF	DS	N	C	Arm F sheet	ﾋﾟｯｸｱｰﾑ F ﾏｲﾗｰ
23	0CW2269P300//	AN	EQ	N	B	Roller	ﾋﾟｯｸﾛｰﾗｰ
24	0CWNSBLT00056	AN	EG		C	Timing belt	ﾀｲﾐﾝｸﾞﾍﾞﾙﾄ
25	0CW2261P055A/	AC	DJ	N	C	Pulley	ﾌﾟｰﾘｰ
26	0CWHP02010SCH	AC	DJ	N	C	Pin(2×10)	ﾍｲｺｳﾋﾟﾝ
27	0CW2261P023E/	AD	DJ	N	C	Arbor	ｱｰﾊﾞｰ
28	0CW2269P316//	AH	DX	N	C	Spring clutch	ﾋﾟｯｸﾊﾞﾈｸﾗｯﾁ
29	0CW2269P206//	AQ	EQ	N	C	Roller shaft	ﾌｨｰﾄﾞﾛｰﾗｼｬﾌﾄ
30	0CW2269P061E/	AG	DX	N	C	Arm F	ﾋﾟｯｸｱｰﾑ F
31	0CW2269K061//	AL	EB	N	C	Roller shaft unit	ﾋﾟｯｸﾛｰﾗｰｼｬﾌﾄﾕﾆｯﾄ
33	0CWER040SKP//	AB	DD	N	C	E-ring 4	E ﾘﾝｸﾞ 4
36	0CW2269P062//	AN	EG	N	C	Arm R	ﾋﾟｯｸｱｰﾑ R
37	0CW2166P034B/	AC	DJ		C	Clip 5	ｸﾘｯﾌﾟ 5
42	0CW2269P318//	AH	DX	N	C	Gear spring clutch	ﾋﾟｯｸｷﾞﾔﾊﾞﾈｸﾗｯﾁ
43	0CW2260P002A/	AE	DJ	N	C	Gear	ｷﾞﾔ
45	0CW2269K062B/	AU	EZ	N	E	Paper feeding upper guide unit	給紙上ｶﾞｲﾄﾞﾕﾆｯﾄ
48	0CW2269P344D/	AG	DS	N	C	Paper feeding sheet	給紙ﾏｲﾗｰ
49	0CW2269P053//	AE	DS	N	C	Sensor lever	ｴﾝﾌﾟﾃｨｾﾝｻｰﾚﾊﾞｰ
50	0CW2269P071D/	AH	DX	N	C	Paper feeding maintenace cover	給紙ﾒﾝﾃﾅﾝｽｶﾊﾞｰ
51	0CW2268P076B/	AD	DJ	N	C	Flange	ﾌﾗﾝｼﾞ
52	0CW2269P355A/	AH	DX	N	C	Cushion	ｽﾎﾟﾝｼﾞ
53	0CW2269P356A/	AF	DS	N	C	Cushion	ｽﾎﾟﾝｼﾞ
60	0CW2269P459//	AG	DS	N	C	Mylar R	ﾏｲﾗｰ R
61	0CW2269P460//	AE	DS	N	C	Pick-up arm F mylar 2	ﾋﾟｯｸｱｯﾌﾟｱｰﾑ F ﾏｲﾗｰ 2

40 RADF 給紙部 1 (RADF Paper feeding section 1)[AR-C260F/AR-C260FP]

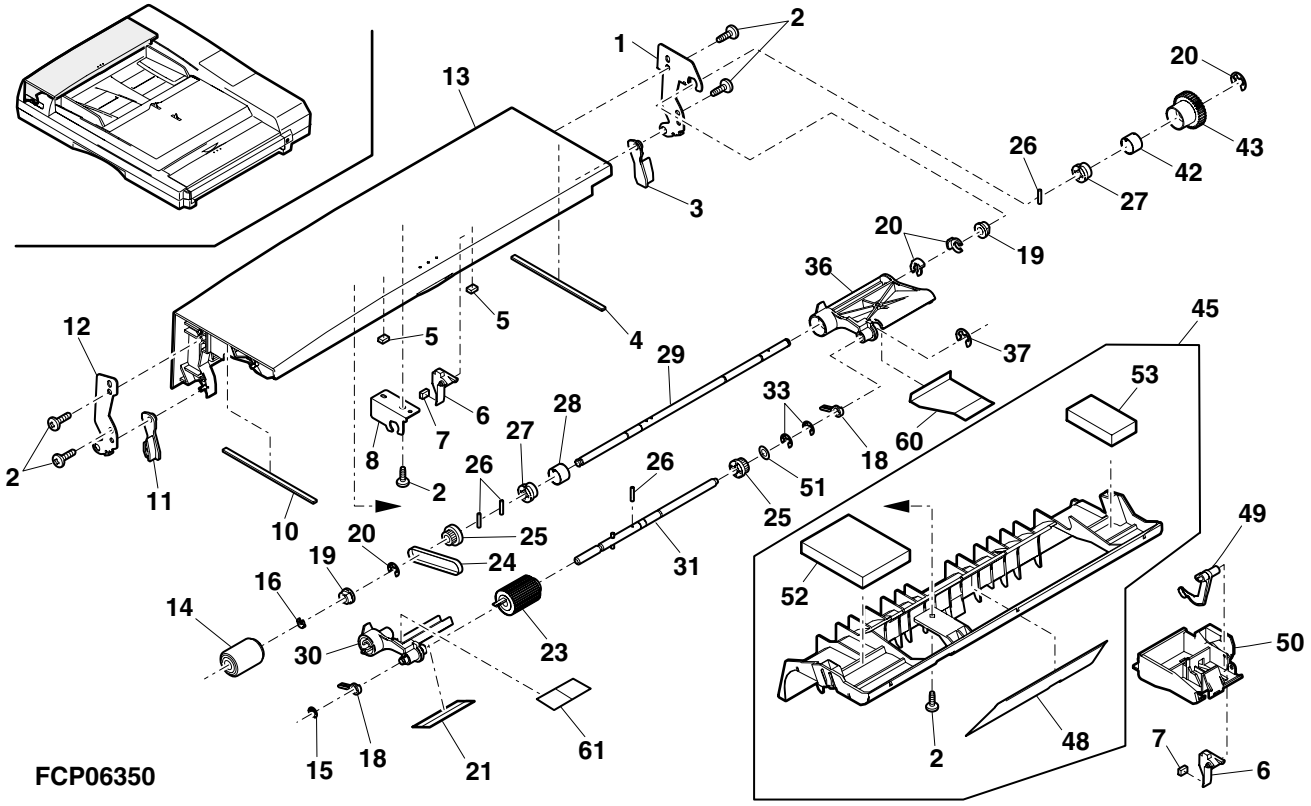

41 RADF 給紙部 2 (RADF Paper feeding section 2)[AR-C260F/AR-C260FP]

NO.	PARTS CODE	PRICE RANK Ex.	PRICE RANK Ja.	NEW MARK	PART RANK	DESCRIPTION	
1	0CW2269P010//	AS	EQ	N	C	Transport guide	搬送ｶﾞｲﾄﾞ
2	0CW2269P011//	AQ	EQ	N	C	Resist guide U	ﾚｼﾞｶﾞｲﾄﾞ U
3	0CW2269K094C/	AZ	FX	N	B	Separation pad unit	分離ﾊﾟｯﾄﾕﾆｯﾄ
4	0CW2269P065//	AE	DS	N	C	Separation spring cover	分離ﾊﾞﾈｶﾊﾞｰ
5	0CW2269P349B/	AD	DJ	N	C	Separation spring	分離ﾊﾞﾈ
6	0CW2185P357A/	AA	DJ		C	Screw(M3×8)	ﾋﾞｽ
7	0CW2269P066//	AF	DS	N	C	Separation spring holder	分離ﾊﾞﾈﾎﾙﾀﾞｰ
8	0CW2268P071//	AE	DJ	N	C	Collar	ﾃｲｹﾞﾝｺﾛ
9	0CW2269K047//	AR	EQ	N	B	Front plate rubber + cover	ﾏｴｻﾊﾞｷｺﾞﾑ＋ｶﾊﾞｰ
10	0CW2269P320//	AE	DS	N	B	Lower cushion	ﾋﾟｯｸ下ｽﾎﾟﾝｼﾞ
11	0CW2269P311//	AG	DX	N	B	Lower moquette	ﾋﾟｯｸ下ﾓｹｯﾄ
12	0CW030080FNWS	AA	DJ		C	Screw(M3×8)	ﾋﾞｽ
13	0CW2268K041A/	AG	DX	N	C	Fulcrum bracket unit R	ｼﾃﾝﾌﾞﾗｹｯﾄｶｼﾒﾕﾆｯﾄ R
14	0CW2164P330A/	AB	DJ		C	Screw(M3×6)	ﾋﾞｽ
15	0CW2247P326A/	AF	DS	N	C	Bearing MF	ｼﾞｸｳｹ MF
16	0CW2268P354//	AG	DX	N	C	Resist spring	ﾚｼﾞｽﾄｽﾌﾟﾘﾝｸﾞ
17	0CWER050SKP//	AA	DD	N	C	E-ring 5	E ﾘﾝｸﾞ 5
18	0CWNSBRG00019	AQ	EQ	N	C	Bearing(φ8)	ﾍﾞｱﾘﾝｸﾞ
19	0CW2252P620C/	AD	DJ	N	C	Clip 4	ｸﾘｯﾌﾟ 4
20	0CWER070SKP//	AA	DD	N	C	E-ring 7	E ﾘﾝｸﾞ 7
21	0CW2268P073//	AD	DJ	N	C	Grar	ｷﾞｬ
22	0CW2254P494A/	AB	DJ	N	C	Screw(M4×8)	ﾋﾞｽ
23	0CW2214P455C/	AE	DS	N	C	Plate spring	ﾛｯｸｲﾀﾊﾞﾈ
24	0CW030060FZTP	AA	DD		C	Screw(M3×6)	ﾋﾞｽ
25	0CW2269P324//	AE	DS	N	C	Empty earth sheet	ｴﾝﾌﾟﾃｨｰｱｰｽｼｰﾙ
26	0CW2269P334//	AY	FQ	N	B	Resist roller	ﾚｼﾞｽﾄﾛｰﾗｰ
27	0CW2240P835A/	AT	EZ	N	B	Reverse sensor	反射ｾﾝｻｰ
28	0CW030080FZWS	AA	DD		C	Screw	ﾋﾞｽ
29	0CW040060FNBB	AB	DJ		C	Screw(M4×6)	ﾋﾞｽ
30	0CW2269P115//	AL	EB	N	C	Resist sensor bracket	ﾚｼﾞｽﾄｾﾝｻｰﾌﾞﾗｹｯﾄ
31	0CW2269P149//	AE	DJ	N	C	Sensor bracket	ｴﾝﾌﾟﾃｨｾﾝｻｰﾌﾞﾗｹｯﾄ
32	0CWE314000619	AH	DX		B	Photo interrupter	ﾌｫﾄｲﾝﾀﾗﾌﾟﾀｰ
33	0CW2269P109//	AT	EZ	N	C	Resist guide L	ﾚｼﾞｶﾞｲﾄﾞ L
35	0CW2269P332//	AR	EQ	N	C	Discharge brush R	給紙除電ﾌﾞﾗｼ R
37	0CW2269K042B/	AG	DX	N	C	Sensor seal unit	反射ｾﾝｻｰｼｰﾙﾕﾆｯﾄ
39	0CW2269P331//	AT	EZ	N	C	Discharge brush F	給紙除電ﾌﾞﾗｼ F
40	0CWPW080025//	AB	DJ	N	C	Poly slider	ﾎﾟﾘｽﾗｲﾀﾞｰ
41	0CW2269P315//	AD	DJ	N	C	Spring	ﾚｼﾞﾛｰﾗｽﾗｽﾄﾊﾞﾈ
42	0CW2268K040B/	AG	DX	N	C	Fulcrum bracket unit F	支点ﾌﾞﾗｹｯﾄｶｼﾒﾕﾆｯﾄ F
43	0CW2254P058A/	AE	DJ	N	C	Sensor lever	ｵｰﾌﾟﾝｾﾝｻｰﾚﾊﾞｰ
44	0CW2254P338A/	AC	DJ	N	C	Spring holder SP	ﾊﾞﾈﾎﾙﾀﾞｰ SP
45	0CW030060FZSW	AA	DD		C	Screw	ﾋﾞｽ
46	0CW2269P038//	AE	DS	N	C	Sensor holder	ｵｰﾌﾟﾝｾﾝｻｰﾎﾙﾀﾞｰ
47	0CW2268P336//	AD	DJ	N	C	Resist guide sheet	ﾚｼﾞｽﾄ案内ﾏｲﾗｰ
48	0CW2268P303//	BA	FX	N	C	Resist assist roller	ﾚｼﾞ従動ﾛｰﾗ
50	0CW2268P401//	AG	DS	N	C	Harness guide 1	ﾊｰﾈｽｶﾞｲﾄﾞ 1
52	0CW2269P451A/	AF	DS	N	C	Separation sheet	分離ﾏｲﾗｰ
53	0CW2269P453A/	AE	DJ	N	C	Separation sheet	分離ﾏｲﾗｰ
54	0CW2269P455A/	AQ	EQ	N	C	Sub pad	ｻﾌﾞﾊﾟｯﾄﾞ
55	0CW2269P012A/	AM	EG	N	C	Lower frame	下ﾌﾚｰﾑ
56	0CW030060FZWS	AA	DD		C	Screw	ﾋﾞｽ

41 RADF 給紙部 2 (RADF Paper feeding section 2)[AR-C260F/AR-C260FP]

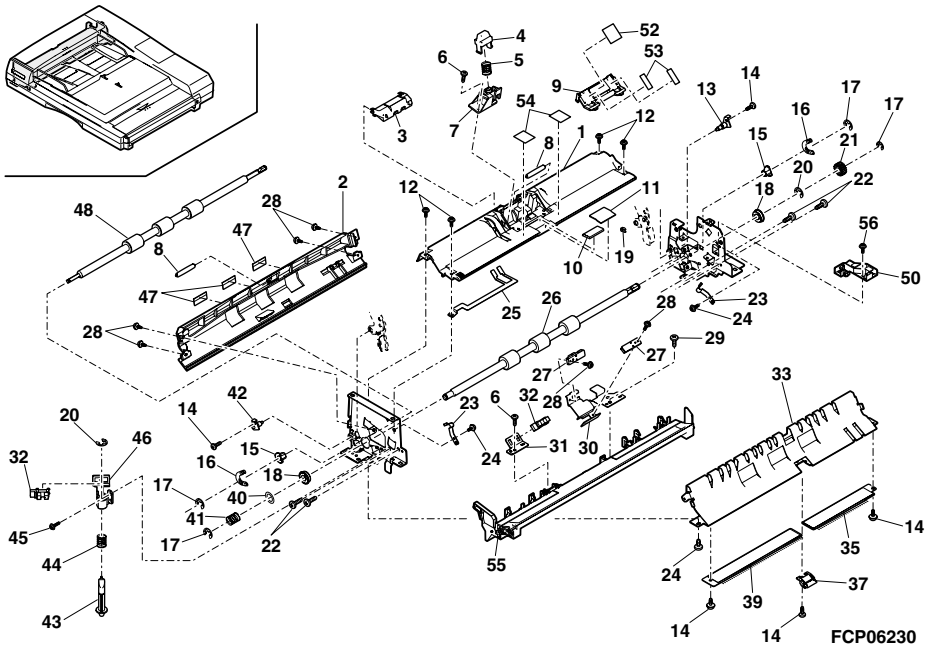

42 RADF 給紙駆動部 (RADF Paper feeding drive section)[AR-C260F/AR-C260FP]

NO.	PARTS CODE	PRICE RANK Ex.	PRICE RANK Ja.	NEW MARK	PART RANK	DESCRIPTION	
1	0CW2269P055//	AE	DS	N	C	Sensor lever	ｵｰﾌﾟﾝｾﾝｻﾚﾊﾞｰ
2	0CWE314000619	AH	DX		B	Photo interrupter	ﾌｫﾄｲﾝﾀﾗﾌﾟﾀｰ
3	0CW030080FZWS	AA	DD		C	Screw	ﾋﾞｽ
4	0CW2268P083//	AF	DS	N	C	Sensor holder	ｵｰﾌﾟﾝｾﾝｻﾎﾙﾀﾞｰ
5	0CW2164P340A/	AA	DD		C	Screw(M4×7)	ﾋﾞｽ
6	0CW040080FZTP	AA	DD		C	Screw(M4×8)	ﾋﾞｽ
8	0CW2269K013//	AU	EZ	N	C	Paper feeding motor bracket unit	給紙ﾓｰﾀｰﾌﾞﾗｹｯﾄﾕﾆｯﾄ
9	0CWNSBRG00016	AT	EZ		C	Braring(φ6)	ﾍﾞｱﾘﾝｸﾞ
11	0CW040080FZWS	AA	DD		C	Screw	ﾋﾞｽ
12	0CW2269K241B/	BL	HL	N	B	Paper feedig motor	給紙ﾓｰﾀｰ
13	0CW2269P171//	AL	EB	N	C	Switch spring	ｽｲｯﾁｲﾀﾊﾞﾈ
14	0CWE120001648	AP	EQ	N	B	Microswitch	ﾏｲｸﾛｽｲｯﾁ
15	0CW023100FZWS	AB	DJ	N	C	Screw(M2.3×10)	ﾋﾞｽ
17	0CW2268P064//	AG	DX	N	C	Pulley	ﾌﾟｰﾘｰ
18	0CW2268P065//	AG	DX	N	C	Gear	ｷﾞｬ
19	0CWER070SKP//	AA	DD	N	C	E-ring 7	E ﾘﾝｸﾞ 7
20	0CWER050SKP//	AA	DD	N	C	E-ring 5	E ﾘﾝｸﾞ 5
21	0CW2268P217//	AK	EB	N	C	Paper feeding gear shaft	給紙ｷﾞｬｼｬﾌﾄ
22	0CWNSBLT00277	AP	EQ	N	C	Timing belt	ﾀｲﾐﾝｸﾞﾍﾞﾙﾄ
23	0CW2269P057//	AE	DS	N	C	Pulley	ﾌﾟｰﾘｰ
24	0CW2268P344//	AP	EQ	N	C	Clutch	連結ﾜﾝｳｪｰｸﾗｯﾁ
25	0CW2268P066//	AH	DX	N	C	Gear	ｷﾞｬ
26	0CWHP02010SCH	AC	DJ	N	C	Pin(2×10)	ﾍｲｺｳﾋﾟﾝ
30	0CW2269P056//	AD	DJ	N	C	Paper feeding tension collar	給紙ﾃﾝｼｮﾝｺﾛ
31	0CW2078P023B/	AC	DJ		C	Screw(M3)	ﾋﾞｽ
32	0CW2269K011//	AH	DX	N	C	Paper feeding tension bracket unit	給紙ﾃﾝｼｮﾝﾌﾞﾗｹｯﾄﾕﾆｯﾄ
33	0CW2268P335//	AD	DJ	N	C	Paper feeding tension spring	給紙ﾃﾝｼｮﾝﾊﾞﾈ

42 RADF 給紙駆動部 (RADF Paper feeding drive section)[AR-C260F/AR-C260FP]

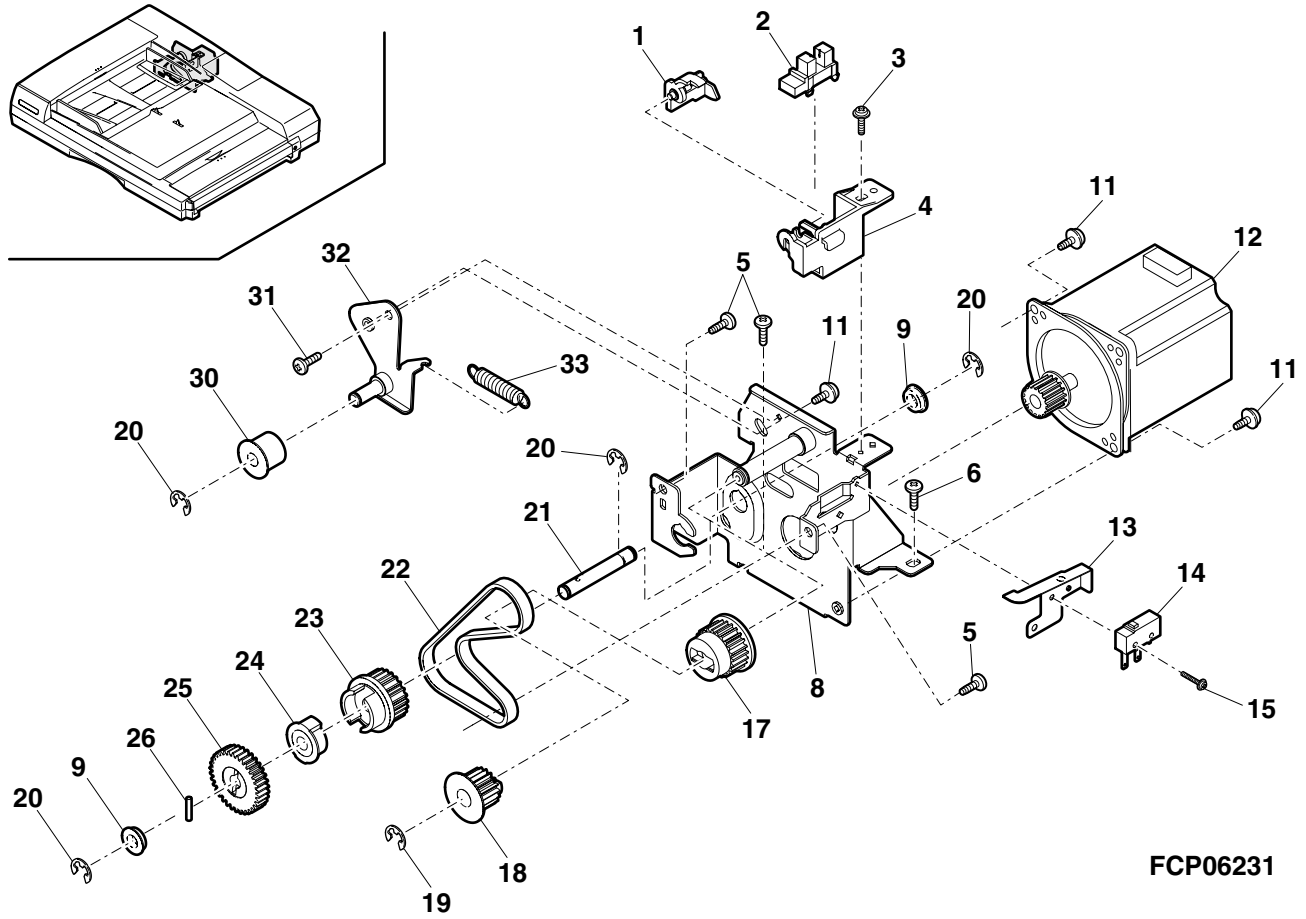

43 RADF 排紙部 1 (RADF Delivery section 1)[AR-C260F/AR-C260FP]

NO.	PARTS CODE	PRICE RANK Ex.	PRICE RANK Ja.	NEW MARK	PART RANK	DESCRIPTION	
1	0CW2269P354//	AL	EB	N	C	Sound proof cushion	反転防音ｽﾎﾟﾝｼﾞ
2	0CW2269P306//	AQ	EQ	N	C	Discharge brush	反転ﾍﾞﾙﾄ口除電ﾌﾞﾗｼ
4	0CW2269P336//	AG	DX	N	C	Fixing sheet	ｵｻｴﾏｲﾗｰ
6	0CWE450001139	AC	DJ	N	C	Clamp	ｸﾗﾝﾌﾟ
8	0CWE450001128	AC	DJ		C	Tielap	ﾀｲﾗｯﾌﾟ
9	0CWE314000619	AH	DX		B	Photo interrupter	ﾌｫﾄｲﾝﾀﾗﾌﾟﾀｰ
10	0CW2269P017//	AE	DJ	N	C	Reverse lever	反転ｵｰﾌﾟﾝﾚﾊﾞｰ
11	0CW4062Q304B/	AC	DJ	N	C	Screw(M3)	ﾋﾞｽ
12	0CW2164P330A/	AB	DJ		C	Screw(M3×6)	ﾋﾞｽ
13	0CW2214P455C/	AE	DS	N	C	Plate spring	ﾛｯｸｲﾀﾊﾞﾈ
14	0CW030080FZBi	AA	DJ		C	Screw(M3×8)	ﾋﾞｽ
15	0CWNSBRG00019	AQ	EQ	N	C	Bearing(φ8)	ﾍﾞｱﾘﾝｸﾞ
16	0CW2268P352//	AD	DJ	N	C	Reverse spring	反転ｽﾗｽﾄﾊﾞﾈ
17	0CW2268P078//	AE	DS	N	C	Pulley	ﾌﾟｰﾘｰ
18	0CWER050SKP//	AA	DD	N	C	E-ring 5	E ﾘﾝｸﾞ 5
19	0CW2269P333//	BB	GD	N	B	Reverse roller	反転ﾛｰﾗｰ
20	0CW3085P334A/	AC	DJ	N	C	Screw(M3×4)	ﾋﾞｽ
21	0CW2269P105//	AH	DX	N	C	Reverse sensor earth	反転ｾﾝｻｰｱｰｽ
22	0CW2269P106//	AF	DS	N	C	Reverse earth	反転ｱｰｽ
23	0CW2269P015//	AG	DS	N	C	Reverse roller guide cover	反転ﾛｰﾗｰｶﾞｲﾄﾞｶﾊﾞｰ
24	0CW2269P304//	AD	DJ	N	C	Reverse sensor sheet	反転ｾﾝｻｰﾏｲﾗｰ
25	0CW2240P835A/	AT	EZ	N	B	Reverse sensor	反射ｾﾝｻｰ
26	0CW2269P014C/	AW	FG	N	C	Reverse roller guide	反転ﾛｰﾗｰｶﾞｲﾄﾞ
27	0CW2078P086B/	AB	DD		C	Screw(M3)	ﾋﾞｽ
28	0CW2269P340//	AF	DS	N	C	Reverse sensor harness sheet	反転ｾﾝｻｰﾊｰﾈｽﾏｲﾗｰ
29	0CW2269P359//	AN	EG	N	C	Reverse exit sheet	反転出口ﾏｲﾗｰ
30	0CW2269P358//	AD	DJ	N	C	Sheet	ｽｸｲｱｹﾞﾏｲﾗｰ
31	0CW030060FZTP	AA	DD		C	Screw(M3×6)	ﾋﾞｽ
32	0CW2129P188A/	AD	DJ	N	C	Clip 3	ｸﾘｯﾌﾟ 3
33	0CW2269P107//	AK	DX	N	C	Reverse roller guide bracket	反転ﾛｰﾗｰｶﾞｲﾄﾞﾌﾞﾗｹｯﾄ
34	0CW2269P016//	AD	DJ	N	C	Delivery lever	排紙ﾚﾊﾞｰ
35	0CW2269P207//	AF	DS	N	C	Delivery sensor lever shaft	排紙ｾﾝｻｰﾚﾊﾞｰｼｬﾌﾄ
37	0CW2078P652B/	AE	DS	N	C	Bearing 8	ｼﾞｸｳｹ 8
38	0CWER070SKP//	AA	DD	N	C	E-ring 7	E ﾘﾝｸﾞ 7
39	0CW2269P059//	AE	DJ	N	C	Reverse solenoid lever	反転ｿﾚﾉｲﾄﾞﾚﾊﾞｰ
40	0CW2252P620C/	AD	DJ	N	C	Clip 4	ｸﾘｯﾌﾟ 4
41	0CW2269P308//	AD	DJ	N	C	Solenoid spring	ｿﾚﾉｲﾄﾞﾊﾞﾈ
44	0CW2269P142//	AF	DS	N	C	Solenoid bracket	反転ｿﾚﾉｲﾄﾞﾌﾞﾗｹｯﾄ
45	0CW030040FZWS	AA	DD		C	Screw(M3×4)	ﾋﾞｽ
47	0CW2269P339//	AD	DJ	N	C	Solenoid lever cushion	ｿﾚﾉｲﾄﾞﾚﾊﾞｰｽﾎﾟﾝｼﾞ
49	0CW2185P357A/	AA	DJ		C	Screw(M3×8)	ﾋﾞｽ
50	0CW2269P389//	AD	DJ	N	C	Revers sensor cushion	反転ｾﾝｻｰｵｻｴｽﾎﾟﾝｼﾞ
51	0CW2269P440//	AT	EZ	N	C	Solenoid + Harness	ｿﾚﾉｲﾄﾞ +ﾊｰﾈｽ
52	0CW2269P013//	AQ	EQ	N	C	Reverse guide	反転ｶﾞｲﾄﾞ

43 RADF 排紙部 1 (RADF Delivery section 1)[AR-C260F/AR-C260FP]

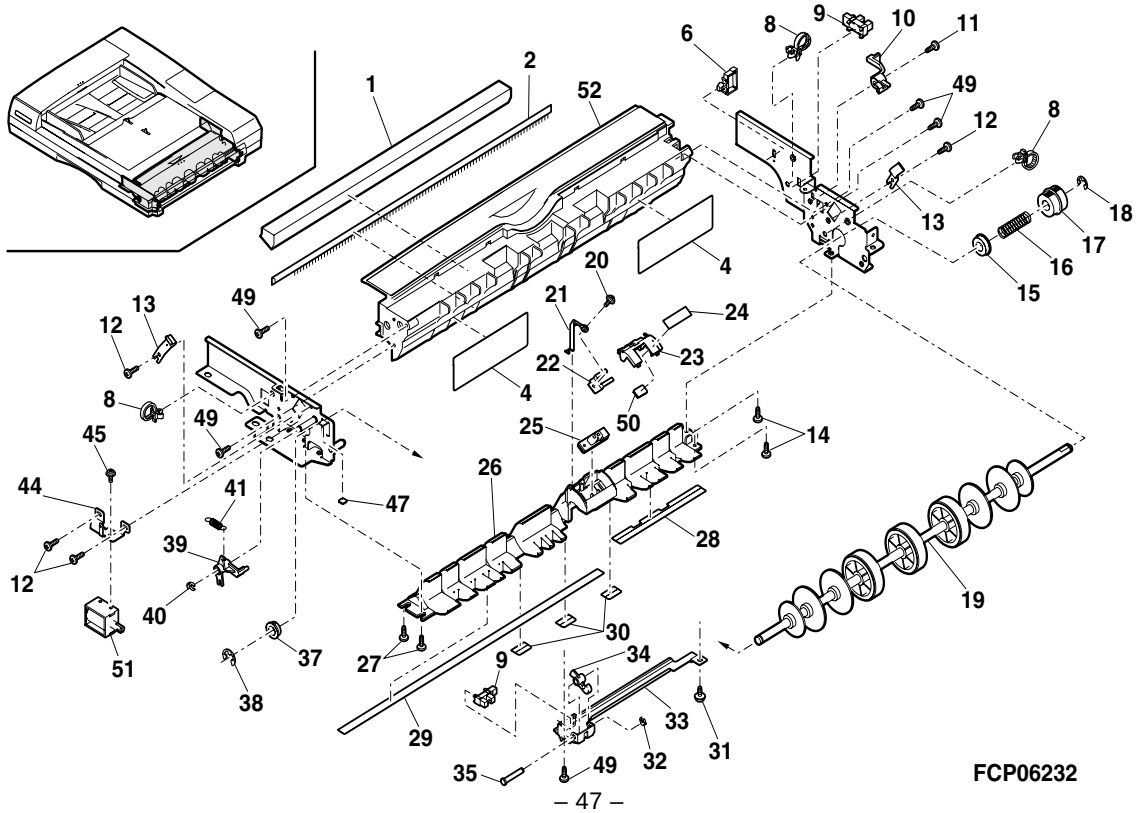

44 RADF 排紙部 2 (RADF Delivery section 2)[AR-C260F/AR-C260FP]

NO.	PARTS CODE	PRICE RANK Ex.	PRICE RANK Ja.	NEW MARK	PART RANK	DESCRIPTION	
1	0CW4048P300A/	AC	DJ	N	C	Screw(M4×5)	ﾋﾞｽ
2	0CW2269P111//	AN	EG	N	C	Reverse motor bracket	反転ﾓｰﾀｰﾌﾞﾗｹｯﾄ
3	0CW2268P360//	AD	DJ	N	C	Reverse tension spring	反転ﾃﾝｼｮﾝﾊﾞﾈ
4	0CW2269P160A/	AG	DX	N	C	Reverse motor adjust bracket	反転ﾓｰﾀｰ調整ﾌﾞﾗｹｯﾄ
5	0CW040060FZWS	AA	DD		C	Screw(M4×6)	ﾋﾞｽ
6	0CW2268K522A/	BL	HL	N	B	Motor	ﾓｰﾀｰ
7	0CW2269P305//	AQ	EQ	N	C	Discharge brush	排紙口除電ﾌﾞﾗｼ
8	0CW2269P006//	AW	FG	N	C	Reverse cover	反転ｶﾊﾞｰ
9	0CW2269P369//	AE	DS	N	C	Reverse cover seal cushion R	反転ｶﾊﾞｰｼｰﾙｽﾎﾟﾝｼﾞ R
10	0CW2269P368//	AF	DS	N	C	Reverse cover seal cushion F	反転ｶﾊﾞｰｼｰﾙｽﾎﾟﾝｼﾞ F
11	0CW2269P338//	AD	DJ	N	C	Reverse sensor cover seal	反射ｾﾝｻｰｼｰﾙ
12	0CW2269P005//	AP	EQ	N	C	Reverse upper guide	反転上ｶﾞｲﾄﾞ
13	0CW2269P335//	AD	DJ	N	C	Reverse collar front sheet	反転ｺﾛ前ﾏｲﾗｰ
14	0CW2269P128//	AE	DS	N	C	Reverse plate spring U	反転ｲﾀﾊﾞﾈ U
15	0CW2268P005A/	AD	DJ	N	C	Reverse collar	反転ｺﾛ
16	0CW2185P357A/	AA	DJ		C	Screw(M3×8)	ﾋﾞｽ
17	0CW2269P303//	AY	FQ	N	C	Reverse flapper	反転ﾌﾗｯﾊﾟｰ
18	0CW2269P104//	AF	DS	N	C	Reverse bracket R	反転ｼﾃﾝﾌﾞﾗｹｯﾄ R
19	0CW2254P494A/	AB	DJ	N	C	Screw(M4×8)	ﾋﾞｽ
20	0CW2269P112//	AF	DS	N	C	Reverse bracket F	反転ｼﾃﾝﾌﾞﾗｹｯﾄ F
21	0CW2269P060//	AE	DJ	N	C	Reverse flapper lever	反転ﾌﾗｯﾊﾟｰﾚﾊﾞｰ
22	0CWER040SKP//	AB	DD	N	C	E-ring 4	E ﾘﾝｸﾞ 4
24	0CW2269P110//	AP	EQ	N	C	Discharge bracket	排紙ﾌﾞﾗｹｯﾄ
25	0CW030060FZTP	AA	DD		C	Screw(M3×6)	ﾋﾞｽ
26	0CW2269P018//	AQ	EQ	N	C	Discharge guide	排紙ｶﾞｲﾄﾞ
27	0CW2269P309//	AC	DJ	N	C	Discharge collar spring	排紙ｺﾛﾊﾞﾈ
28	0CW2269P211//	AG	DX	N	C	Discharge collar shaft	排紙ｺﾛｼｬﾌﾄ
29	0CW2269P357//	AG	DX	N	C	Discharge collar	排紙ｺﾛ
30	0CW2269P351//	AC	DJ	N	C	Flapper cushion	ﾌﾗｯﾊﾟｰｽﾎﾟﾝｼﾞ
31	0CW2269P337//	AE	DJ	N	C	Discharge collar front sheet	排紙ｺﾛ前ﾏｲﾗｰ
32	0CW2269P307//	AN	EQ	N	C	Sheet	ｽｸｲｱｹﾞﾏｲﾗｰ
33	0CW2269K016//	AF	DS	N	C	Paper feeding bracket R unit	給紙ｼﾃﾝﾌﾞﾗｹｯﾄ R ﾕﾆｯﾄ
34	0CW3085P334A/	AC	DJ	N	C	Screw(M3×4)	ﾋﾞｽ
35	0CW040060FZBP	AB	DJ		C	Screw	ﾋﾞｽ
36	0CWNSBLT00278	AL	EB	N	C	Timing belt	ﾀｲﾐﾝｸﾞﾍﾞﾙﾄ
37	0CW2269P399A/	AE	DS	N	C	Sheet	ﾏｲﾗｰ
40	0CW2260P457//	AP	EQ	N	C	Discharge mylar S	除電ﾏｲﾗｰ S
41	0CW2260P458//	AN	EQ	N	C	Discharge mylar C	除電ﾏｲﾗｰ C

44 RADF 排紙部 2 (RADF Delivery section 2)[AR-C260F/AR-C260FP]

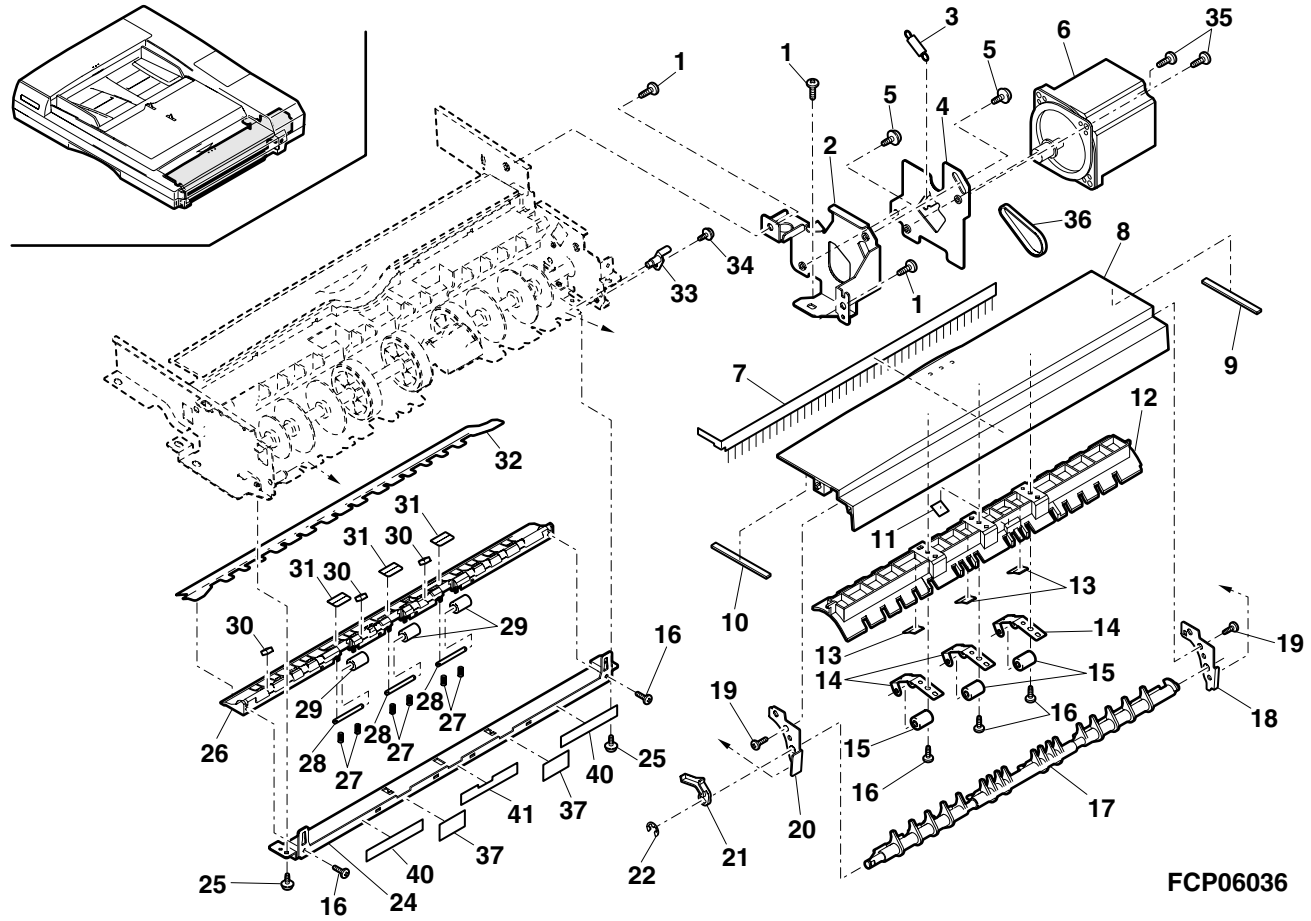

45 RADF 搬送部 (RADF Transport section)[AR-C260F/AR-C260FP]

NO.	PARTS CODE	PRICE RANK Ex.	PRICE RANK Ja.	NEW MARK	PART RANK	DESCRIPTION	
1	0CW2269P327//	BA	FX	N	C	Belt roller L	ﾍﾞﾙﾄﾛｰﾗ左
2	0CW2164P142A/	AE	DS		C	Belt roller spring holder	ﾍﾞﾙﾄﾛｰﾗﾊﾞﾈｳｹ
3	0CW2205P360A/	AD	DJ	N	C	Roller spring	ｵﾄｼﾛｰﾗｰﾊﾞﾈ
4	0CW2269P029//	AG	DS	N	C	Roller holder F	ｵﾄｼﾛｰﾗｰﾎﾙﾀﾞｰF
5	0CW2269P025//	AG	DS	N	C	Roller holder R	ｵﾄｼﾛｰﾗｰﾎﾙﾀﾞｰR
6	0CW030060FZBP	AA	DD		C	Screw	ﾋﾞｽ
7	0CW2269P343//	AZ	FQ	N	C	Roller	ｵﾄｼﾛｰﾗｰ
8	0CWNSBRG00019	AQ	EQ	N	C	Bearing(φ8)	ﾍﾞｱﾘﾝｸﾞ
9	0CW2269P099A/	AD	DJ	N	C	Pulley	ﾌﾟｰﾘｰ
10	0CWER070SKP//	AA	DD	N	C	E-ring 7	E ﾘﾝｸﾞ 7
11	0CW2269P120//	AP	EQ	N	C	DF side plate R	DF ｿｸﾊﾞﾝR
12	0CW2269P119//	AQ	EQ	N	C	DF side plate F	DF ｿｸﾊﾞﾝF
13	0CW040080FNBi	AA	DD		C	Screw	ﾋﾞｽ
14	0CW2198P374A/	AC	DJ	N	C	Washer(M4)	ﾜｯｼｬｰ
15	0CW2214P044A/	AF	DS	N	C	Belt guide	ﾍﾞﾙﾄｶﾞｲﾄﾞ
16	0CW2205P147A/	AG	DX	N	C	Roller plate spring	ｵｻｴﾛｰﾗｰｲﾀﾊﾞﾈ
17	0CW2205P025A/	AD	DJ	N	C	Spacer	ｱｯｾﾝﾂｽﾍﾞｰｻｰ
18	0CW2268P059//	AE	DJ	N	C	Fixing holder	ｵｻｴﾎﾙﾀﾞｰ
19	0CW2205P351A/	AU	EZ	N	C	Belt roller	ﾍﾞﾙﾄｵｻｴﾛｰﾗｰ
20	0CW2269P123//	AH	DX	N	C	Belt tension bracket F	ﾍﾞﾙﾄﾃﾝｼｮﾝﾌﾞﾗｹｯﾄ F
21	0CW2078P023B/	AC	DJ		C	Screw(M3)	ﾋﾞｽ
22	0CW040060FNBi	AA	DD		C	Screw(M4×6)	ﾋﾞｽ
23	0CW2269P026//	AF	DS	N	C	Roller holder 1-F	ｵｻｴﾛｰﾗｰﾎﾙﾀﾞｰ1-F
24	0CW2269P022//	AF	DS	N	C	Roller holder 1-R	ｵｻｴﾛｰﾗｰﾎﾙﾀﾞｰ1-R
25	0CW2268P110//	AH	DX	N	C	Transport tension bracket	搬送ﾃﾝｼｮﾝﾌﾞﾗｹｯﾄ
26	0CW2269P382//	AD	DJ	N	C	DF unit regulation cushion	DF ﾕﾆｯﾄ上下規制ﾊﾟｯﾄ
27	0CW2269P326//	AZ	FQ	N	C	Belt roller R	ﾍﾞﾙﾄﾛｰﾗｰ右
28	0CW2214P520B/	AU	EZ	N	C	Fixing holder	ｵｻｴﾎﾙﾀﾞｰ
29	0CW2078P086B/	AB	DD		C	Screw(M3)	ﾋﾞｽ
30	0CW030060FZWS	AA	DD		C	Screw	ﾋﾞｽ
31	0CW2268P146//	AP	EQ	N	C	Transport unit stay	搬送ﾕﾆｯﾄｽﾃｰ
33	0CW2269P176//	AE	DS	N	C	Collar plate spring	ｺﾛｲﾀﾊﾞﾈ
35	0CW2198P305B/	AH	DX	N	C	Collar H	ｵｻｴｺﾛ H
36	0CW2214P157B/	AK	DX	N	C	Collar plate spring L	ｵｻｴｺﾛｲﾀﾊﾞﾈ L
37	0CW2214P575A/	BR	LP	N	A	DF belt CGR	DF ﾍﾞﾙﾄ CGR
38	0CW030080FZWS	AA	DD		C	Screw	ﾋﾞｽ

45 RADF 搬送部 (RADF Transport section)[AR-C260F/AR-C260FP]

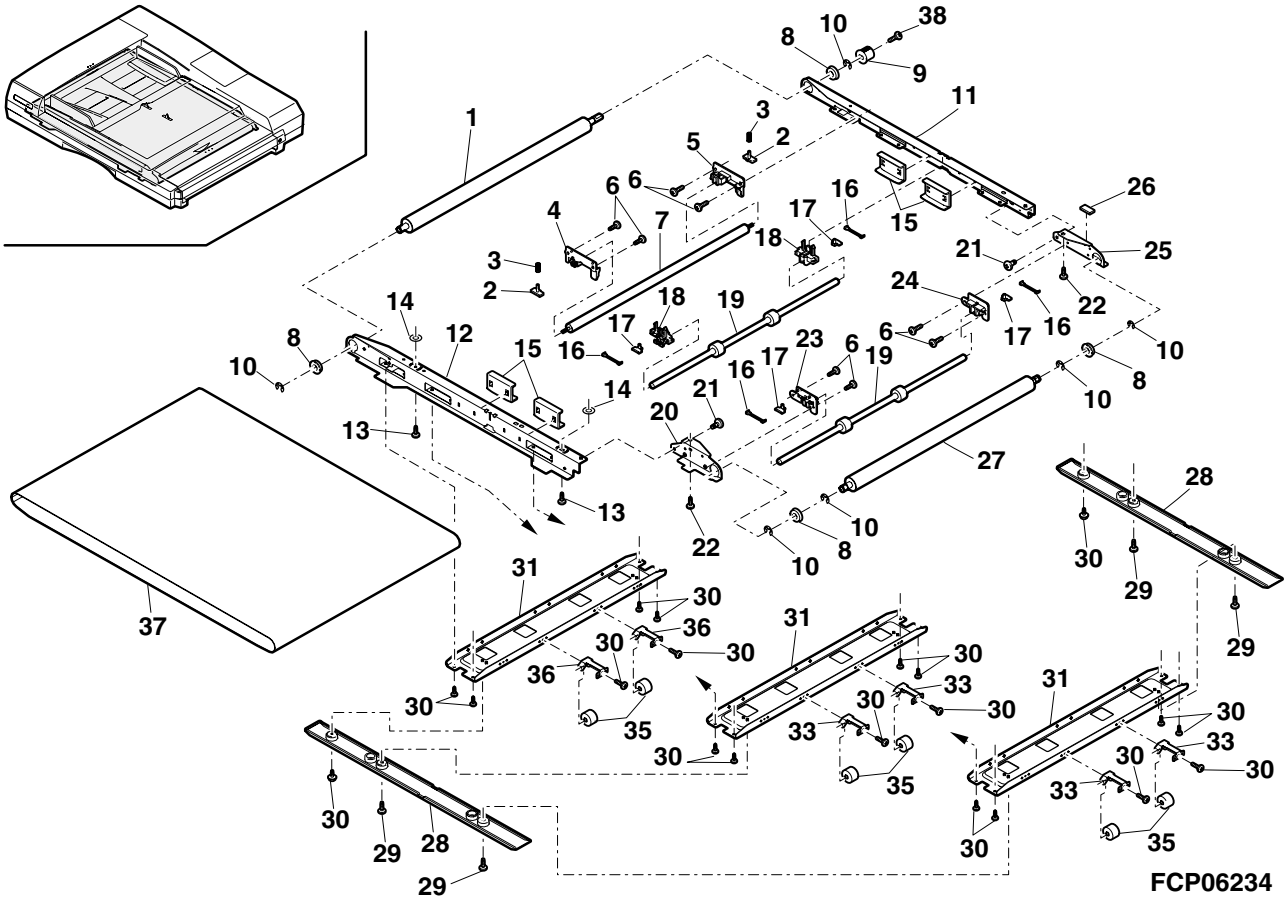

46 RADF 搬送駆動部 (RADF Transport drive section)[AR-C260F/AR-C260FP]

NO.	PARTS CODE	PRICE RANK Ex.	PRICE RANK Ja.	NEW MARK	PART RANK	DESCRIPTION	
1	0CW040080FZWS	AA	DD		C	Screw	ﾋﾞｽ
2	0CW2268P402／／	AK	DX	N	C	Harness guide 2	ﾊｰﾈｽｶﾞｲﾄﾞ 2
3	0CW040080FZSW	AA	DD		C	Screw	ﾋﾞｽ
4	0CW2269K242B／	BM	HV	N	B	Motor	ﾓｰﾀｰ
5	0CW2269P363／／	AD	DJ	N	C	Transport tension spring	搬送ﾃﾝｼｮﾝﾊﾞﾈ
7	0CW040060FZTP	AA	DD		C	Screw(M4×6)	ﾋﾞｽ
8	0CW2269P114／／	AQ	EQ	N	C	Transport motor bracket	搬送ﾓｰﾀｰﾌﾞﾗｹｯﾄ
9	0CW4054P220D／	AB	DJ		C	Screw	ﾋﾞｽ
10	0CW2269K012／／	AG	DX	N	C	Transport tension bracket unit	搬送ﾃﾝｼｮﾝﾌﾞﾗｹｯﾄﾕﾆｯﾄ
11	0CW2268P069／／	AD	DJ	N	C	Tension collar	ﾃﾝｼｮﾝｺﾛ
12	0CW2268P076／／	AD	DJ	N	C	Flange	ﾌﾗﾝｼﾞ
13	0CWER050SKP／／	AA	DD	N	C	E-ring 5	E ﾘﾝｸﾞ 5

46 RADF 搬送駆動部 (RADF Transport drive section)[AR-C260F/AR-C260FP]

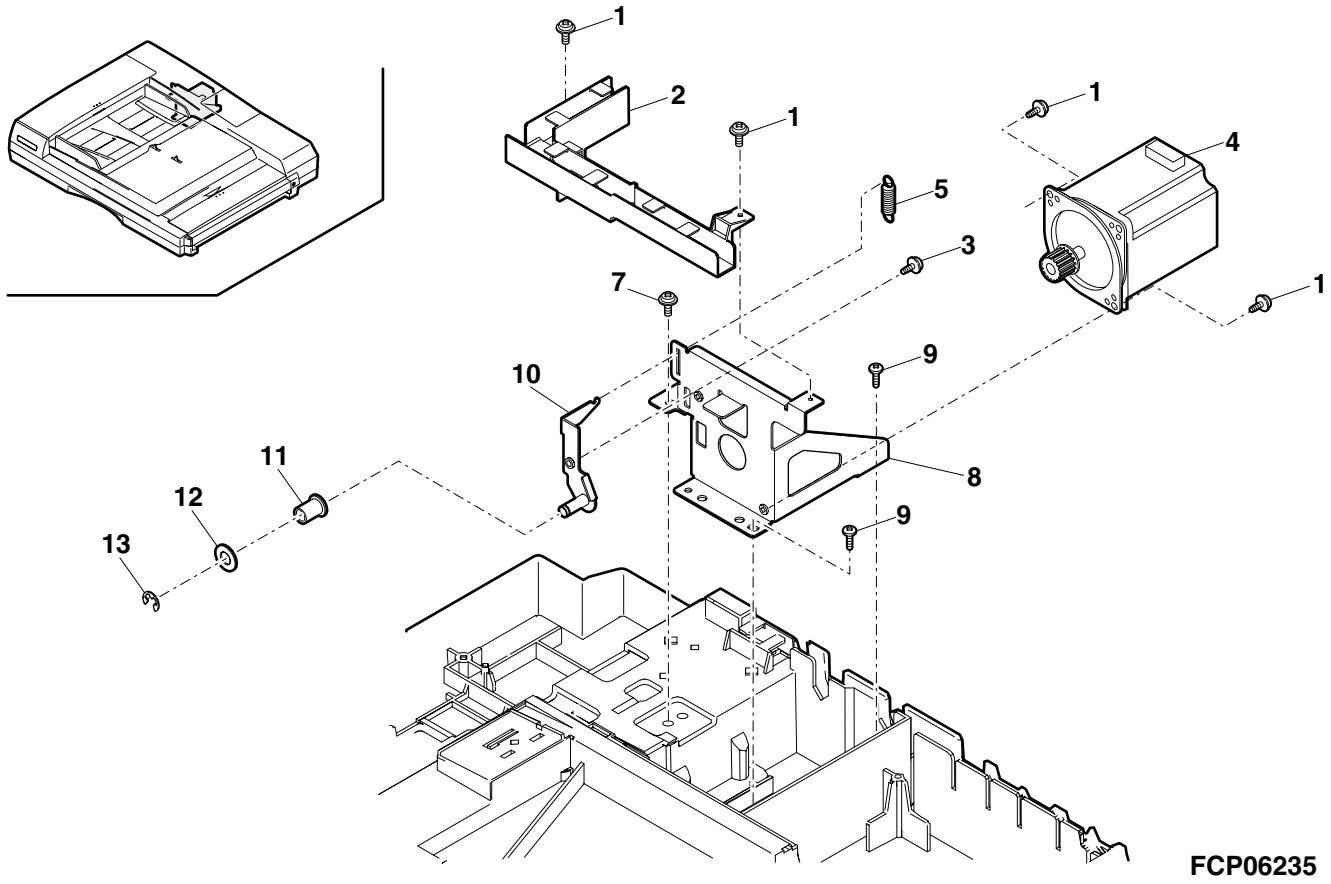

47 RADF 台板ﾕﾆｯﾄ (RADF Base plate unit)[AR-C260F/AR-C260FP]

NO.	PARTS CODE	PRICE RANK Ex.	PRICE RANK Ja.	NEW MARK	PART RANK	DESCRIPTION	
1	0CW2214P116B/	AE	DJ	N	C	DF fixing plate	DF ｺﾃｲﾌﾟﾚｰﾄ
2	0CW2269P001//	BP	LP	N	D	Base	ﾍﾞｰｽ
3	0CW2269K202//	BZ	TF	N	E	Main PWB	ﾒｲﾝｷﾊﾞﾝ
4	0CW2269K240//	AX	FG	N	B	ROM (IC)	ROM (IC)
5	0CW040120FZiT	AB	DJ	N	C	Screw(M4×12)	ﾋﾞｽ
6	0CWE450000070	AB	DJ		C	Clamp	ｸﾗﾝﾌﾟ
7	0CWE450001139	AC	DJ	N	C	Clamp	ｸﾗﾝﾌﾟ
8	0CW2164P340A1	AB	DJ	N	C	Screw(M4×7)	ﾋﾞｽ
9	0CW2185P357A/	AA	DJ		C	Screw(M3×8)	ﾋﾞｽ
10	0CW2269P159//	AF	DS	N	C	Switch bracket	ｵｰﾌﾟﾝｽｲｯﾁﾌﾞﾗｹｯﾄ
11	0CW2269P172//	AK	DX	N	C	Switch plate spring 2	ｽｲｯﾁﾌﾟﾚｰﾄﾊﾞﾈ 2
12	0CWE120001648	AP	EQ	N	B	Microswitch	ﾏｲｸﾛｽｲｯﾁ
13	0CW023100FZWS	AB	DJ	N	C	Screw(M2.3×10)	ﾋﾞｽ
14	0CW2269P146//	AN	EG	N	C	Base stay R	ﾍﾞｰｽｽﾃｰ R
15	0CW2269P108//	AH	DX	N	C	Base F bracket	ﾍﾞｰｽ F ﾌﾞﾗｹｯﾄ
16	0CW4054P143B1	AB	DJ	N	C	Screw(M4×12)	ﾋﾞｽ
17	0CW2269K026G/	BD	GN	N	C	Hinge R unit	ﾋﾝｼﾞ R ﾕﾆｯﾄ
18	0CW2269P147//	AF	DS	N	C	Switch lever	ｵｰﾌﾟﾝｽｲｯﾁﾚﾊﾞｰ
19	0CW030060FZWS	AA	DD		C	Screw	ﾋﾞｽ
21	0CW040060FZTP	AA	DD		C	Screw(M4×6)	ﾋﾞｽ
22	0CW2269K001//	AH	DX	N	C	Transport unit fulcrum bracket R	搬送ﾕﾆｯﾄｼｼﾞﾌﾞﾗｹｯﾄ R
23	0CW2268P145//	AG	DS	N	C	Transport unit earth spring	搬送ﾕﾆｯﾄｱｰｽｲﾀﾊﾞﾈ
24	0CW030060FZTP	AA	DD		C	Screw(M3×6)	ﾋﾞｽ
25	0CW2269P116//	AH	DX	N	C	Magnet bracket	ﾏｸﾞﾈｯﾄﾌﾞﾗｹｯﾄ
26	0CW030040FZWS	AA	DD		C	Screw(M3×4)	ﾋﾞｽ
27	0CW2214P393A/	AG	DX	N	C	Magnet catch(13N)	ﾏｸﾞﾈｯﾄｷｬｯﾁ
28	0CW030060FZSW	AA	DD		C	Screw	ﾋﾞｽ
29	0CW2269K025F/	BD	GJ	N	C	Hinge L unit	ﾋﾝｼﾞ L ﾕﾆｯﾄ
31	0CW2269K008//	AK	EB	N	C	Transport unit fulcrum bracket L	搬送ﾕﾆｯﾄｼｼﾞﾌﾞﾗｹｯﾄ L
32	0CWER050SKP//	AA	DD	N	C	E-ring 5	E ﾘﾝｸﾞ 5
33	0CWNSBRG00016	AT	EZ		C	Braring(φ6)	ﾍﾞｱﾘﾝｸﾞ
34	0CW2269P221//	AH	DX	N	C	Transport drive shaft	搬送駆動ｼｬﾌﾄ
35	0CWNSBLT00282	AR	EQ	N	C	Belt	ﾍﾞﾙﾄ
36	0CW2269P020//	AD	DJ	N	C	Belt drive pulley	ﾍﾞﾙﾄ駆動ｱｲﾄﾞﾗﾌﾟｰﾘｰ
37	0CW2268P076//	AD	DJ	N	C	Flange	ﾌﾗﾝｼﾞ
38	0CW2269P393A1	AG	DX	N	C	Magnet catch(13N)	ﾏｸﾞﾈｯﾄｷｬｯﾁ
40	0CW2269P145//	AW	FG	N	C	Base stay L	ﾍﾞｰｽｽﾃｰ L
41	0CWNSBLT00281	AQ	EQ	N	C	Timing belt	ﾀｲﾐﾝｸﾞﾍﾞﾙﾄ

47 RADF 台板ﾕﾆｯﾄ (RADF Base plate unit)[AR-C260F/AR-C260FP]

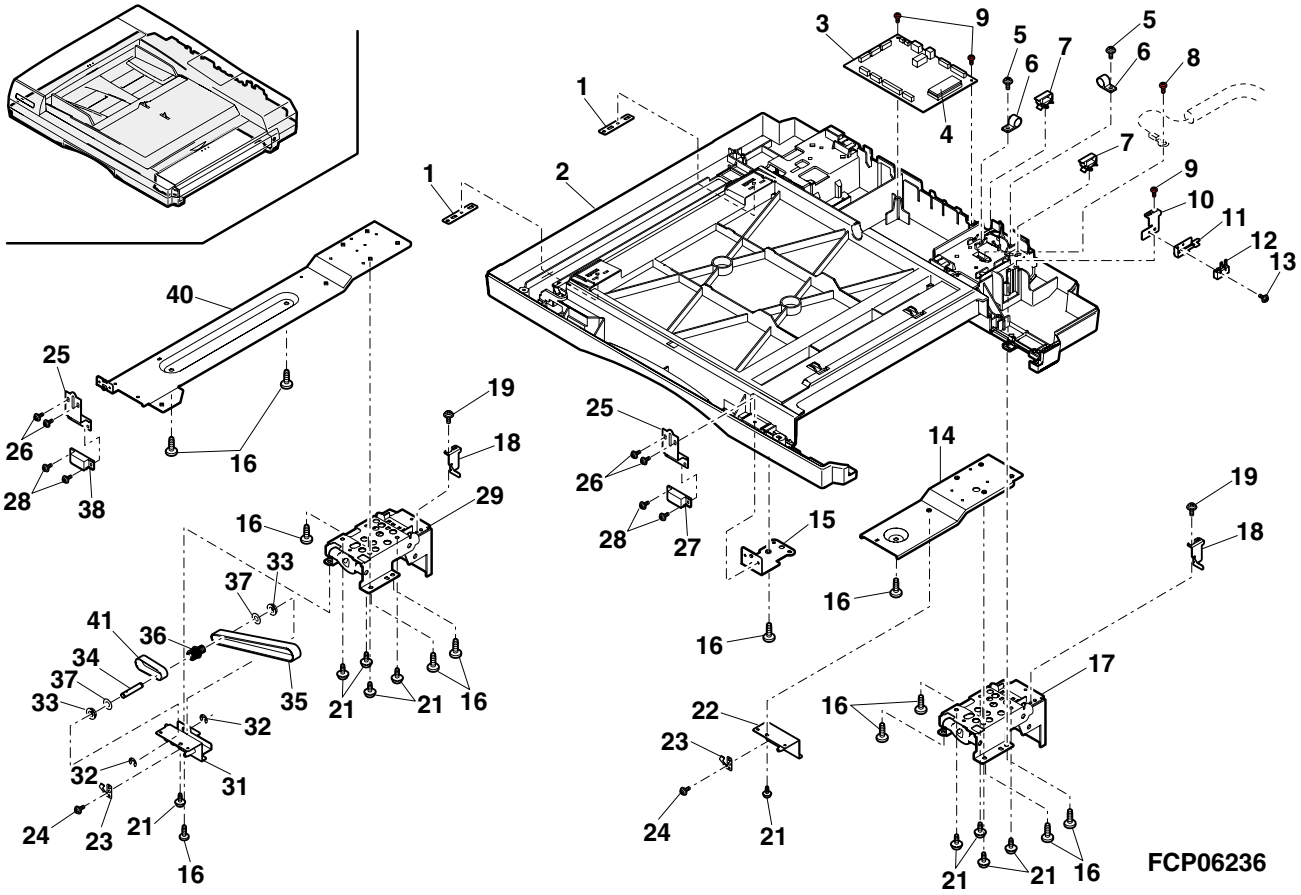

48 RADF 配線部 (RADF Wiring section)[AR-C260F/AR-C260FP]

NO.	PARTS CODE	PRICE RANK		NEW MARK	PART RANK	DESCRIPTION
		Ex.	Ja.			
1	0CW2269K225B/	AP	EQ	N	C	Harness ﾊｰﾈｽ
2	0CW2269K223B/	AL	EB	N	C	Harness ﾊｰﾈｽ
3	0CW2269K221//	AM	EG	N	C	Harness ﾊｰﾈｽ
6	0CW2269K230//	AK	EB	N	C	Harness ﾊｰﾈｽ
7	0CW2269K234B/	AY	FQ	N	C	Harness ﾊｰﾈｽ
8	0CW2269K243//	BL	HL	N	C	Harness ﾊｰﾈｽ
9	0CW2269K222B/	AG	DX	N	C	Harness ﾊｰﾈｽ
10	0CW2269K231//	AK	DX	N	C	Harness ﾊｰﾈｽ
11	0CW2269K224//	AL	EB	N	C	Harness ﾊｰﾈｽ

48 RADF 配線部 (RADF Wiring section)[AR-C260F/AR-C260FP]

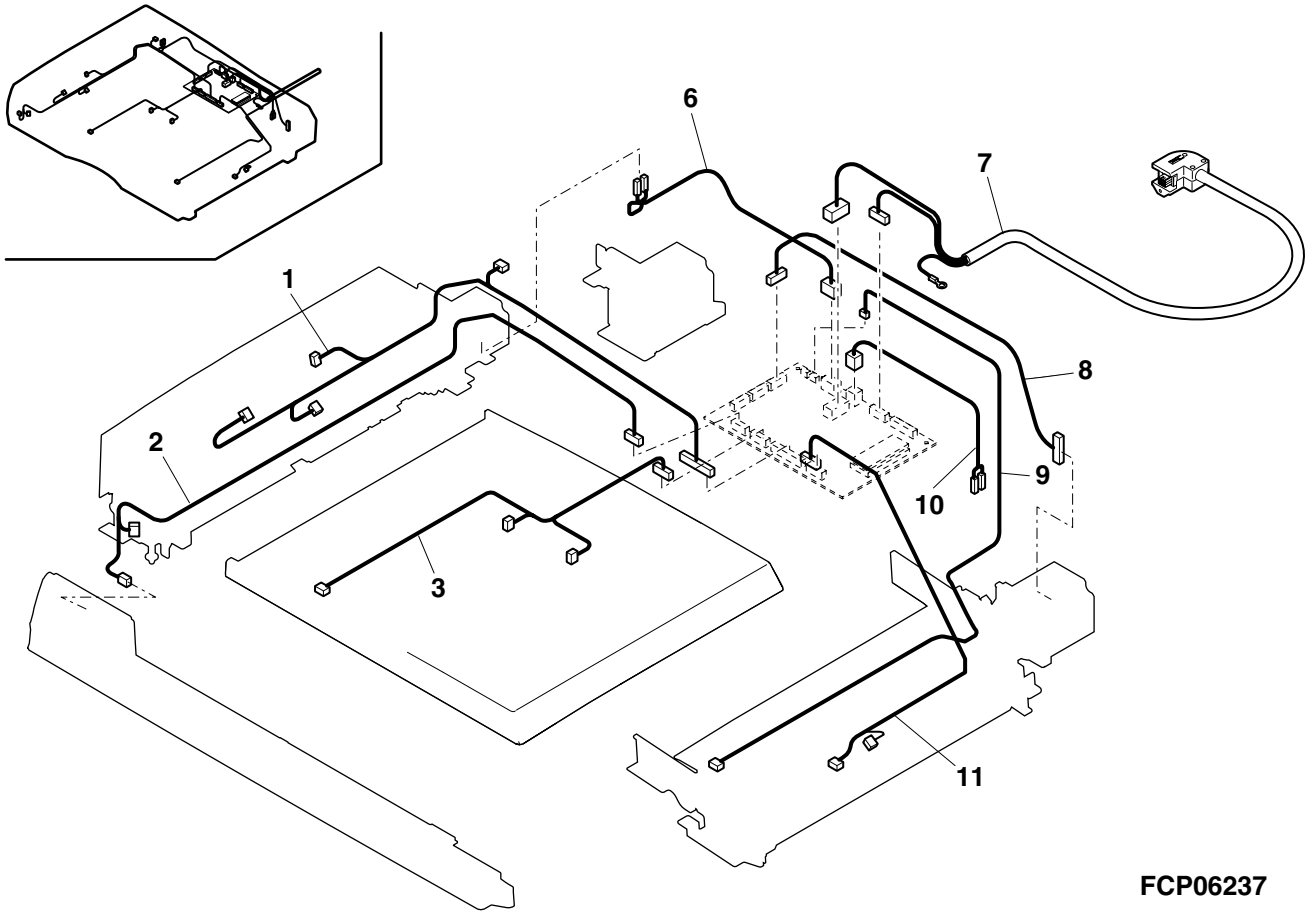

49 ﾓﾃﾞﾑｺﾝﾄﾛｰﾙ基板 (Modem control PWB)[AR-C260F/C260FP]

NO.	PARTS CODE	PRICE RANK Ex.	PRICE RANK Ja.	NEW MARK	PART RANK	DESCRIPTION		
1	QCNCM1069ACZZ	AD	DD		C	Connector(6pin)	[CN108]	ｺﾈｸﾀｰ
2	QCNCM7014SC0B	AD	DJ		C	Connector(2pin)	[CN104]	ｺﾈｸﾀｰ
3	QCNCM7014SC0C	AA	DD		C	Connector(3pin)	[CN105]	ｺﾈｸﾀｰ
4	QCNCW1155FCZZ	AE	DJ		C	Connector(30pin)	[CN107]	ｺﾈｸﾀｰ
5	QSOCN0082FCZZ	AP	EQ		C	Connector(26pin)	[CN101]	ｺﾈｸﾀｰ
6	QSOCZ0073FCZZ	AL	EB		C	Connector(72pin)	[CN106]	ｺﾈｸﾀｰ
7	RC-KZ0008QCZZ	AB	DD		C	Capacitor(50WV 0.1μF)	[C117,118,119,120,122,123]	ｺﾝﾃﾞﾝｻｰ
	RC-KZ0008QCZZ	AB	DD		C	Capacitor(50WV 0.1μF)	[C124,125,149,151,153,155]	ｺﾝﾃﾞﾝｻｰ
	RC-KZ0008QCZZ	AB	DD		C	Capacitor(50WV 0.1μF)	[C156,165,175,180,231,250]	ｺﾝﾃﾞﾝｻｰ
	RC-KZ0008QCZZ	AB	DD		C	Capacitor(50WV 0.1μF)	[C267,282]	ｺﾝﾃﾞﾝｻｰ
8	RCRSP0068FCZZ	AG	DS		B	Crystal(12.500MHZ)	[X101]	ｸﾘｽﾀﾙ
9	RCRSP0069FCZZ	AG	DS		B	Crystal(14.7456MHZ)	[X103]	ｸﾘｽﾀﾙ
10	RCRUA0010FCZZ	AQ	EQ		B	Crystal(24.576MHZ)	[X104]	ｸﾘｽﾀﾙ
12	RFiLN0047FCZZ	AC	DJ		C	EMI filter(MMZ1608S121)	[NF101,102]	EMI ﾌｧﾙﾀｰ
13	RFiLZ1042LCZZ	AC	DJ		C	Filter(ZJSR5101102)	[NF103]	ﾌｨﾙﾀｰ
14	VCCCCZ1EH221J	AB	DD		C	Capacitor(25WV 220pF)	[C177]	ｺﾝﾃﾞﾝｻｰ
15	VCCCCZ1HH100D	AA	DD		C	Capacitor(50WV 10pF)	[C141,143,197,233]	ｺﾝﾃﾞﾝｻｰ
16	VCCCCZ1HH150J	AA	DD		C	Capacitor(50WV 15pF)	[C292]	ｺﾝﾃﾞﾝｻｰ
17	VCEAPS1CC106M	AC	DD		C	Capacitor(16WV 10μF)	[C130,131,224,257]	ｺﾝﾃﾞﾝｻｰ
18	VCEAPS1HC475M	AC	DJ		C	Capacitor(50WV 4.7μF)	[C161,181,182]	ｺﾝﾃﾞﾝｻｰ
19	VCEAPZ1EW107M	AD	DJ		C	Capacitor(25WV 100μF)	[C249,268,273,281]	ｺﾝﾃﾞﾝｻｰ
20	VCEAPZ1EW476M	AE	DJ		C	Capacitor(25WV 47μF)	[C176,192,232,245,246]	ｺﾝﾃﾞﾝｻｰ
	VCEAPZ1EW476M	AE	DJ		C	Capacitor(25WV 47μF)	[C248,287,288]	ｺﾝﾃﾞﾝｻｰ
21	VCFYDA1HA104J	AC	DD		C	Capacitor(50WV 0.1μF)	[C179,185,186]	ｺﾝﾃﾞﾝｻｰ
22	VCFYDA1HA105J	AE	DJ		C	Capacitor(50WV 1μF)	[C178,190]	ｺﾝﾃﾞﾝｻｰ
23	VCFYDA1HA333J	AC	DD		C	Capacitor(50WV 0.033μF)	[C184]	ｺﾝﾃﾞﾝｻｰ
24	VCFYDA1HA474J	AD	DJ		C	Capacitor(50WV 0.47μF)	[C157]	ｺﾝﾃﾞﾝｻｰ
25	VCKYCZ1AF224Z	AC	DD		C	Capacitor(10WV 0.22μF)	[C216~221,251,252,253]	ｺﾝﾃﾞﾝｻｰ
	VCKYCZ1AF224Z	AC	DD		C	Capacitor(10WV 0.22μF)	[C269,271,275~279]	ｺﾝﾃﾞﾝｻｰ
26	VCKYCZ1CF104Z	AB	DD		C	Capacitor(16WV 0.10μF)	[C101,102,105,106,107]	ｺﾝﾃﾞﾝｻｰ
	VCKYCZ1CF104Z	AB	DD		C	Capacitor(16WV 0.10μF)	[C121,132,133,134,135,136]	ｺﾝﾃﾞﾝｻｰ
	VCKYCZ1CF104Z	AB	DD		C	Capacitor(16WV 0.10μF)	[C139,140,142,144]	ｺﾝﾃﾞﾝｻｰ
	VCKYCZ1CF104Z	AB	DD		C	Capacitor(16WV 0.10μF)	[C145,146,147]	ｺﾝﾃﾞﾝｻｰ
	VCKYCZ1CF104Z	AB	DD		C	Capacitor(16WV 0.10μF)	[C148,163,166,168~174]	ｺﾝﾃﾞﾝｻｰ
	VCKYCZ1CF104Z	AB	DD		C	Capacitor(16WV 0.10μF)	[C189,191,198~208]	ｺﾝﾃﾞﾝｻｰ
	VCKYCZ1CF104Z	AB	DD		C	Capacitor(16WV 0.10μF)	[C222,223]	ｺﾝﾃﾞﾝｻｰ
	VCKYCZ1CF104Z	AB	DD		C	Capacitor(16WV 0.10μF)	[C229,230,234~237,239,247]	ｺﾝﾃﾞﾝｻｰ
	VCKYCZ1CF104Z	AB	DD		C	Capacitor(16WV 0.10μF)	[C254,255,256,264~266,270]	ｺﾝﾃﾞﾝｻｰ
	VCKYCZ1CF104Z	AB	DD		C	Capacitor(16WV 0.10μF)	[C272,274,280,285,286,289]	ｺﾝﾃﾞﾝｻｰ
	VCKYCZ1CF104Z	AB	DD		C	Capacitor(16WV 0.10μF)	[C290,291,293,294]	ｺﾝﾃﾞﾝｻｰ
27	VCKYCZ1EB472K	AA	DD		C	Capacitor(25WV 4700pF)	[C154,187,104]	ｺﾝﾃﾞﾝｻｰ
28	VCKYCZ1HB102K	AA	DD		C	Capacitor(50WV 1000pF)	[C152,162,188,193,194,196]	ｺﾝﾃﾞﾝｻｰ
29	VCKYCZ1HB471K	AA	DD		C	Capacitor(50WV 470pF)	[C137,138]	ｺﾝﾃﾞﾝｻｰ
31	VHDRB751V40-1	AD	DJ		B	Diode(RB751V40)	[D103,105]	ﾀﾞｲｵｰﾄﾞ
32	VHD1SS133//-1	AA	DD		B	Diode(1SS133)	[D104]	ﾀﾞｲｵｰﾄﾞ
33	VHERD5.1EB2-1	AA	DD		B	Zener diode(RD5.1EB2)	[ZD101]	ﾂｪﾅｰﾀﾞｲｵｰﾄﾞ
34	VHiEES02L400P	AG	DX		B	IC(EES02L400P)	[IC110]	IC
35	RH-iX0002FCZZ	AQ	EQ		B	IC(74LCX16652M)	[IC123]	IC
36	VHiLCX244SJ-1	AG	DX		B	IC(LCX244SJ)	[IC124,128,129]	IC
37	VHiLM111718-1	AH	DX		B	IC(LM111718)	[U101]	IC
38	VHiMAX3225E-1	AT	EZ		B	IC(MAX3225E)	[IC108,109]	IC
39	VHi29F04-01FC	AX	FG		B	Modem flash unit(29F04)	[IC132]	ﾓﾃﾞﾑﾌﾗｯｼｭﾕﾆｯﾄ
40	VHiMN195004-1	BN	HZ		B	IC(MN195004)	[IC131]	IC
42	VHiNJM2113M-1	AG	DS		B	IC(NJM2113M)	[IC114]	IC
43	VHiNJM4558MF1	AE	DJ		B	IC(NJM4558MF1)	[IC112,113,115]	IC
44	VHiNJU4051M-1	AG	DX		B	IC(NJU4051M)	[IC502]	IC
45	VHiNJU4052BMF	AG	DS		B	IC(NJU4052BMF)	[IC503,504]	IC
46	VHiNJU4053BMF	AG	DS		B	IC(NJU4053BMF)	[IC501]	IC
47	VHiPST591CMT1	AE	DS		B	IC(PST591CMT1)	[IC107]	IC
48	VHiPST591iM-1	AG	DS		B	IC(PST591IM)	[IC106]	IC
49	VHiPST994C+-1	AG	DS		B	IC(PST994C)	[IC120]	IC
50	VHiSD4M16L1-1	AZ	FX		B	IC(SD4M16L1)	[IC119]	IC
51	VHiSH770910-1	BH	GX		B	IC(SH770910)	[IC111]	IC
52	VHiSR1024L15J	AU	FG		B	IC(SR1024L15J)	[IC121,122]	IC
53	RH-iX0004FCZZ	AS	EQ		B	IC(61C1024-15J)	[IC130]	IC
54	VHiTD62503F/-	AG	DX		B	IC(TD62503F)	[IC101]	IC
55	VHiTR88017S-1	BA	FX		B	IC(TR88017S)	[IC126]	IC
56	VHiUPD65946-1	BB	GD		B	IC(UPD65946)	[IC127]	IC
57	VHi74HC132M-1	AF	DS		B	IC(74HC132M)	[IC118,133]	IC
58	VHi74HC74AM-1	AE	DJ		B	IC(74HC74AM)	[IC117]	IC
59	VHi74LCX04M-1	AE	DJ		B	IC(74LCX04M)	[IC103,116]	IC
60	VHi74LVX08M-1	AE	DJ		B	IC(74LVX08M)	[IC105]	IC
61	VHi74LVX14M-1	AE	DJ		B	IC(74LVX14M)	[IC102]	IC
62	VHP1LHEE-002A	AC	DJ		B	LED (Red)(1LHEE)	[LED104,105]	LED 赤
63	VRD-HT2EY751J	AA	DD		C	Resistor(1/4W 750Ω ±5%)	[R160,231,232]	抵抗
64	VRD-HT2HY471J	AA	DD		C	Resistor(1/2W 470Ω ±5%)	[R233]	抵抗
65	VRS-CZ1JD000J	AA	DD		C	Resistor(1/16W 0Ω ±5%)	[R101,120~126,128,129,130]	抵抗
	VRS-CZ1JD000J	AA	DD		C	Resistor(1/16W 0Ω ±5%)	[R131,201,225,226,255]	抵抗
	VRS-CZ1JD000J	AA	DD		C	Resistor(1/16W 0Ω ±5%)	[R268~282,328~333,376]	抵抗
67	VRS-CZ1JD101J	AA	DD		C	Resistor(1/16W 100Ω ±5%)	[R285~298,315~327]	抵抗

49 ﾓﾃﾞﾑｺﾝﾄﾛｰﾙ基板 (Modem control PWB)[AR-C260F/C260FP]

NO.	PARTS CODE	PRICE RANK Ex.	PRICE RANK Ja.	NEW MARK	PART RANK	DESCRIPTION
67	VRS-CZ1JD101J	AA	DD		C	Resistor(1/16W 100Ω ±5%) [R344~359] 抵抗
68	VRS-CZ1JD102J	AA	DD		C	Resistor(1/16W 1.0KΩ ±5%) [R342] 抵抗
69	VRS-CZ1JD103F	AA	DD		C	Resistor(1/16W 10KΩ ±1%) [R170,210,213,227] 抵抗
70	VRS-CZ1JD103J	AA	DD		C	Resistor(1/16W 10KΩ ±5%) [R106,117,132,176,177,178] 抵抗
	VRS-CZ1JD103J	AA	DD		C	Resistor(1/16W 10KΩ ±5%) [R179,180,183,192,193,197] 抵抗
	VRS-CZ1JD103J	AA	DD		C	Resistor(1/16W 10KΩ ±5%) [R198,199,229,237~252] 抵抗
	VRS-CZ1JD103J	AA	DD		C	Resistor(1/16W 10KΩ ±5%) [R264,265,266,283] 抵抗
	VRS-CZ1JD103J	AA	DD		C	Resistor(1/16W 10KΩ ±5%) [R284,310,311] 抵抗
	VRS-CZ1JD103J	AA	DD		C	Resistor(1/16W 10KΩ ±5%) [R312,313,314,334,335,336] 抵抗
	VRS-CZ1JD103J	AA	DD		C	Resistor(1/16W 10KΩ ±5%) [R337,338,343,367] 抵抗
71	VRS-CZ1JD104J	AA	DD		C	Resistor(1/16W 100KΩ ±5%) [R187,191] 抵抗
72	VRS-CZ1JD123J	AA	DD		C	Resistor(1/16W 12KΩ ±5%) [R174] 抵抗
73	VRS-CZ1JD133F	AA	DD		C	Resistor(1/16W 13KΩ ±1%) [R184,185] 抵抗
74	VRS-CZ1JD152J	AA	DD		C	Resistor(1/16W 1.5KΩ ±5%) [R234] 抵抗
75	VRS-CZ1JD153F	AB	DD		C	Resistor(1/16W 15KΩ ±1%) [R166,167,168,169] 抵抗
76	VRS-CZ1JD183J	AA	DD		C	Resistor(1/16W 18KΩ ±5%) [R215,228] 抵抗
77	VRS-CZ1JD203J	AA	DD		C	Resistor(1/16W 20KΩ ±5%) [R186] 抵抗
78	VRS-CZ1JD222J	AA	DD		C	Resistor(1/16W 2.2KΩ ±5%) [R230] 抵抗
79	VRS-CZ1JD273F	AA	DD		C	Resistor(1/16W 27KΩ ±1%) [R214] 抵抗
80	VRS-CZ1JD273J	AA	DD		C	Resistor(1/16W 27KΩ ±5%) [R195,366,378,204] 抵抗
81	VRS-CZ1JD302J	AA	DD		C	Resistor(1/16W 3KΩ ±5%) [R173] 抵抗
82	VRS-CZ1JD330J	AA	DD		C	Resistor(1/16W 33Ω ±5%) [R104,134,267,300~309] 抵抗
	VRS-CZ1JD330J	AA	DD		C	Resistor(1/16W 33Ω ±5%) [R361,368~371,373~375] 抵抗
83	VRS-CZ1JD333J	AA	DD		C	Resistor(1/16W 33KΩ ±5%) [R211,212,224] 抵抗
84	VRS-CZ1JD363J	AA	DD		C	Resistor(1/16W 36KΩ ±5%) [R189] 抵抗
85	VRS-CZ1JD393F	AA	DD		C	Resistor(1/16W 39KΩ ±1%) [R171] 抵抗
86	VRS-CZ1JD393J	AA	DD		C	Resistor(1/16W 39KΩ ±5%) [R216] 抵抗
87	VRS-CZ1JD471J	AA	DD		C	Resistor(1/16W 470Ω ±5%) [R116,340] 抵抗
88	VRS-CZ1JD472J	AA	DD		C	Resistor(1/16W 4.7KΩ ±5%) [R103,105,114,133] 抵抗
	VRS-CZ1JD472J	AA	DD		C	Resistor(1/16W 4.7KΩ ±5%) [R135,139~142] 抵抗
	VRS-CZ1JD472J	AA	DD		C	Resistor(1/16W 4.7KΩ ±5%) [R144,145,148] 抵抗
	VRS-CZ1JD472J	AA	DD		C	Resistor(1/16W 4.7KΩ ±5%) [R161,163,164,165,202] 抵抗
	VRS-CZ1JD472J	AA	DD		C	Resistor(1/16W 4.7KΩ ±5%) [R205,206,207] 抵抗
	VRS-CZ1JD472J	AA	DD		C	Resistor(1/16W 4.7KΩ ±5%) [R208,209,260] 抵抗
	VRS-CZ1JD472J	AA	DD		C	Resistor(1/16W 4.7KΩ ±5%) [R261,262,263,299,360] 抵抗
89	VRS-CZ1JD473J	AA	DD		C	Resistor(1/16W 47KΩ ±5%) [R235] 抵抗
90	VRS-CZ1JD513J	AA	DD		C	Resistor(1/16W 51KΩ ±5%) [R182] 抵抗
91	VRS-CZ1JD560J	AA	DD		C	Resistor(1/16W 56Ω ±5%) [R143,236] 抵抗
92	VRS-CZ1JD682J	AA	DD		C	Resistor(1/16W 6.8KΩ ±5%) [R172,190] 抵抗
93	VRS-CZ1JD683J	AA	DD		C	Resistor(1/16W 68KΩ ±5%) [R188] 抵抗
94	VRS-CZ1JD753J	AA	DD		C	Resistor(1/16W 75KΩ ±5%) [R200] 抵抗
95	VRS-CZ1JD912J	AA	DD		C	Resistor(1/16W 9.1KΩ ±5%) [R217] 抵抗
96	VRS-CZ1JD913J	AA	DD		C	Resistor(1/16W 91KΩ ±5%) [R220] 抵抗
97	VSDTA114EUA-1	AC	DJ		B	Transistor(DTA114EUA) [TR118] ﾄﾗﾝｼﾞｽﾀｰ
98	VSDTC114EUA-1	AC	DJ		B	Transistor(DTC114EUA) [TR101,111,117] ﾄﾗﾝｼﾞｽﾀｰ
99	VSDTC363EU+-1	AC	DJ		B	Transistor(DTC363EU) [TR102,103,104,105,109,110] ﾄﾗﾝｼﾞｽﾀｰ
	VSDTC363EU+-1	AC	DJ		B	Transistor(DTC363EU) [TR112,113,114,115,116] ﾄﾗﾝｼﾞｽﾀｰ
	VSDTC363EU+-1	AC	DJ		B	Transistor(DTC363EU) [TR120,121,122,123,124] ﾄﾗﾝｼﾞｽﾀｰ
100	VS2SD592A//-1	AE	DJ		B	Transistor(2SD592A) [TR119] ﾄﾗﾝｼﾞｽﾀｰ
101	PCAPH0010GCZZ	AD	DJ		C	Cap(JM-2W-96) [JP104] ｷｬｯﾌﾟ
102	QPiN-0003GCZZ	AC	DJ		C	Pin(T3B-SQ) [JP104] ﾋﾟﾝ
103	VCKYCZ1CB103K	AA	DD		C	Capacitor(16WV 0.010μF) [C295] ｺﾝﾃﾞﾝｻｰ
	(Unit)					
901	CPWBN1472FCE4	CG	UM	N	E	Modem control PWB unit ﾓﾃﾞﾑｺﾝﾄﾛｰﾙ基板ﾕﾆｯﾄ

50 TEL/LIU 基板ﾕﾆｯﾄ (TEL/LIU PWB)[AR-C260F/C260FP]

NO.	PARTS CODE	PRICE RANK Ex.	PRICE RANK Ja.	NEW MARK	PART RANK	DESCRIPTION
1	QCNCW1155FCZZ	AE	DJ		C	Connector(30pin) [CN2] ｺﾈｸﾀｰ
2	QJAKT0001FCZZ	AD	DJ		C	Moduler connector(2pin) [MJ1] ﾓｼﾞｭﾗｰｺﾈｸﾀｰ
3	QJAKT0002FCZZ	AE	DJ		C	Moduler connector(6pin) [MJ2] ﾓｼﾞｭﾗｰｺﾈｸﾀｰ
4	RC-KZ0008QCZZ	AB	DD		C	Capacitor(50WV 0.1μF) [C5,33,34,43,45,53] ｺﾝﾃﾞﾝｻｰ
	RC-KZ0008QCZZ	AB	DD		C	Capacitor(50WV 0.1μF) [C17,27,35,47] ｺﾝﾃﾞﾝｻｰ
6	RCiLZ0089FCZZ	AG	DX		C	Coil(ST110AV) [L8] ｺｲﾙ
7	RFiLN0047FCZZ	AC	DJ		C	EMI filter(MMZ1608S121) [NF1] EMI ﾌｧﾙﾀｰ
8	RFiLN2011SCZZ	AC	DJ		C	Coil(SBT-0260) [L1,2,6,7] ｺｲﾙ
	RFiLN2011SCZZ	AC	DJ		C	Coil(SBT-0260) [L3,4,5] ｺｲﾙ
9	RR-WZ0418FCZZ	AF	DS		B	Relay(HPC1/2W) [R30] ﾘﾚｰ
10	RRLYD1211QCZZ	AH	DX		B	Relay(OUAZSH112LZ) [RY2] ﾘﾚｰ
	RRLYD1211QCZZ	AH	DX		B	Relay(OUAZSH112LZ) [RY1] ﾘﾚｰ
11	RRLYD1411QCZZ	AM	EG		B	Relay(RSH-12-U) [RY3,4] ﾘﾚｰ
14	VCCCCZ1EH221J	AB	DD		C	Capacitor(25WV 220pF) [C50] ｺﾝﾃﾞﾝｻｰ
	VCCCCZ1EH221J	AB	DD		C	Capacitor(25WV 220pF) [C20,32] ｺﾝﾃﾞﾝｻｰ
15	VCCCCZ1HH101J	AA	DD		C	Capacitor(50WV 100pF) [C44] ｺﾝﾃﾞﾝｻｰ
16	VCEAZA1EW476M	AC	DD		C	Capacitor(25WV 47μF) [C14,51] ｺﾝﾃﾞﾝｻｰ
17	VCEAZA1HW105M	AB	DD		C	Capacitor(50WV 1.0μF) [C52] ｺﾝﾃﾞﾝｻｰ

50 TEL/LIU 基板ﾕﾆｯﾄ (TEL/LIU PWB)[AR-C260F/C260FP]

NO.	PARTS CODE	PRICE RANK Ex.	PRICE RANK Ja.	NEW MARK	PART RANK	DESCRIPTION		
17	VCEAZA1HW105M	AB	DD		C	Capacitor(50WV 1.0μF)	[C36]	ｺﾝﾃﾞﾝｻｰ
18	VCEAZA1HW226M	AC	DD		C	Capacitor(50WV 22μF)	[C1]	ｺﾝﾃﾞﾝｻｰ
19	VCEAZA1HW334M	AB	DD		C	Capacitor(50WV 0.33μF)	[C10]	ｺﾝﾃﾞﾝｻｰ
20	VCEAZA1HW475M	AB	DD		C	Capacitor(50WV 4.7μF)	[C4,11,42,48,49]	ｺﾝﾃﾞﾝｻｰ
21	VCE9EA1CW106M	AC	DD		C	Capacitor(16WV 10μF)	[C30,31]	ｺﾝﾃﾞﾝｻｰ
22	VCE9GA1CW476M	AD	DD		C	Capacitor(16WV 47μF)	[C8]	ｺﾝﾃﾞﾝｻｰ
23	VCFYJU2EA105K	AE	DS		C	Capacitor(250WV 1μF)	[C6]	ｺﾝﾃﾞﾝｻｰ
25	VCKYCZ1HB102K	AA	DD		C	Capacitor(50WV 1000pF)	[C9]	ｺﾝﾃﾞﾝｻｰ
	VCKYCZ1HB102K	AA	DD		C	Capacitor(50WV 1000pF)	[C2,18,19,21,28]	ｺﾝﾃﾞﾝｻｰ
26	VCKYCZ1HB471K	AA	DD		C	Capacitor(50WV 470pF)	[C39]	ｺﾝﾃﾞﾝｻｰ
27	VHD0R5G4B42-1	AF	DS		B	Diode(0R5G4B42)	[REC1,2]	ﾀﾞｲｵｰﾄﾞ
28	VHD1SS133//-1	AA	DD		B	Diode(1SS133)	[D7,8,9]	ﾀﾞｲｵｰﾄﾞ
	VHD1SS133//-1	AA	DD		B	Diode(1SS133)	[D1,3,4,5,6,10]	ﾀﾞｲｵｰﾄﾞ
29	VHD10DDA40+-1	AB	DD		B	Diode(10DDA40)	[D2]	ﾀﾞｲｵｰﾄﾞ
30	VHEHZS2C1//-1	AB	DJ		B	Zener diode(HZS2C1)	[ZD2,3]	ﾂｪﾅｰﾀﾞｲｵｰﾄﾞ
31	VHEMTZJ33B+-1	AC	DJ		B	Zener diode(MTZJ33B)	[ZD1,6]	ﾂｪﾅｰﾀﾞｲｵｰﾄﾞ
32	VHEMTZJ4R7B-1	AC	DJ		B	Zener diode(MTZJ4R7B)	[ZD4,5,8,9]	ﾂｪﾅｰﾀﾞｲｵｰﾄﾞ
33	VHEMTZJ8.2B-1	AB	DJ		B	Zener diode(MTZJ8.2B)	[ZD7]	ﾂｪﾅｰﾀﾞｲｵｰﾄﾞ
34	VHiBU4066BCF1	AD	DJ		B	IC(BU4066BCF1)	[IC103,104]	IC
35	VHiNJM4558MF1	AE	DJ		B	IC(NJM4558MF1)	[IC102,105,107,108]	IC
36	VHiTA31076F-1	AH	DX		B	IC(TA31076F)	[IC101]	IC
37	VHPPC814X1+-1	AD	DJ		B	Photo coupler(PC814X1)	[PC3]	ﾌｫﾄｶﾌﾟﾗｰ
38	VHPPC817D//-1	AD	DJ		B	Photo coupler(PC817D)	[PC1,4]	ﾌｫﾄｶﾌﾟﾗｰ
39	VHPTLP624-1BV	AG	DX		B	Photo coupler(TLP624)	[PC2]	ﾌｫﾄｶﾌﾟﾗｰ
40	VHVDSS-401M//	AH	DX		B	Arrestor(DSS)	[SA2]	ｱﾚｽﾀ
41	VHVTNR5V471K/	AD	DJ		B	Varistor(TNR5V471K)	[SA1]	ﾊﾞﾘｽﾀｰ
42	VHVTN07G101-1	AB	DJ		B	Varistor(TN07G101)	[VA2]	ﾊﾞﾘｽﾀｰ
43	VRD-HT2EY100J	AA	DD		C	Resistor(1/4W 10Ω ±5%)	[R11,53]	抵抗
44	VRD-HT2EY104J	AA	DD		C	Resistor(1/4W 100KΩ ±5%)	[R20]	抵抗
45	VRD-HT2EY124J	AA	DD		C	Resistor(1/4W 120KΩ ±5%)	[R21]	抵抗
46	VRD-HT2EY164J	AA	DD		C	Resistor(1/4W 160KΩ ±5%)	[R4]	抵抗
47	VRD-HT2EY183J	AA	DD		C	Resistor(1/4W 18KΩ ±5%)	[R39]	抵抗
48	VRD-HT2EY204J	AA	DD		C	Resistor(1/4W 200KΩ ±5%)	[R3]	抵抗
49	VRD-HT2EY224J	AA	DD		C	Resistor(1/4W 220KΩ ±5%)	[R19]	抵抗
50	VRD-HT2EY300J	AA	DD		C	Resistor(1/4W 30Ω ±5%)	[R18]	抵抗
52	VRD-HT2EY303J	AA	DD		C	Resistor(1/4W 30KΩ ±5%)	[R38]	抵抗
53	VRD-HT2EY471J	AA	DD		C	Resistor(1/4W 470Ω ±5%)	[R7]	抵抗
55	VRD-HT2EY682J	AA	DD		C	Resistor(1/4W 6.8KΩ ±5%)	[R5]	抵抗
56	VRD-HT2EY910J	AA	DD		C	Resistor(1/4W 91Ω ±5%)	[R10]	抵抗
57	VRS-CZ1JD000J	AA	DD		C	Resistor(1/16W 0Ω ±5%)	[R1,2,6]	抵抗
58	VRS-CZ1JD102J	AA	DD		C	Resistor(1/16W 1.0KΩ ±5%)	[R15,23,26,28,29]	抵抗
59	VRS-CZ1JD103J	AA	DD		C	Resistor(1/16W 10KΩ ±5%)	[R14,25,56,75,76]	抵抗
60	VRS-CZ1JD113J	AA	DD		C	Resistor(1/16W 11KΩ ±5%)	[R43,79,81]	抵抗
61	VRS-CZ1JD153J	AA	DD		C	Resistor(1/16W 15KΩ ±5%)	[R74]	抵抗
62	VRS-CZ1JD183J	AA	DD		C	Resistor(1/16W 18KΩ ±5%)	[R78]	抵抗
63	VRS-CZ1JD203J	AA	DD		C	Resistor(1/16W 20KΩ ±5%)	[R41,54]	抵抗
64	VRS-CZ1JD223J	AA	DD		C	Resistor(1/16W 22KΩ ±5%)	[R8,33,48,49,50]	抵抗
	VRS-CZ1JD223J	AA	DD		C	Resistor(1/16W 22KΩ ±5%)	[R65,66,68,71]	抵抗
	VRS-CZ1JD223J	AA	DD		C	Resistor(1/16W 22KΩ ±5%)	[R51,52,59,60]	抵抗
65	VRS-CZ1JD243J	AA	DD		C	Resistor(1/16W 24KΩ ±5%)	[R55]	抵抗
	VRS-CZ1JD243J	AA	DD		C	Resistor(1/16W 24KΩ ±5%)	[R82]	抵抗
66	VRS-CZ1JD272J	AA	DD		C	Resistor(1/16W 2.7KΩ ±5%)	[R40]	抵抗
67	VRS-CZ1JD273J	AA	DD		C	Resistor(1/16W 27KΩ ±5%)	[R58,77,84]	抵抗
68	VRS-CZ1JD332J	AA	DD		C	Resistor(1/16W 3.3KΩ ±5%)	[R44]	抵抗
70	VRS-CZ1JD512J	AA	DD		C	Resistor(1/16W 5.1KΩ ±5%)	[R73]	抵抗
71	VRS-CZ1JD513J	AA	DD		C	Resistor(1/16W 51KΩ ±5%)	[R72]	抵抗
72	VRS-CZ1JD621J	AA	DD		C	Resistor(1/16W 681KΩ ±5%)	[R67,69]	抵抗
74	VRS-RA3AA202J	AB	DD		C	Resistor(1W 2KΩ ±5%)	[R13]	抵抗
75	VSDTC143ZKA-1	AC	DJ		B	Transistor(DTC143ZKA)	[Q104,117,118,119,121,122]	ﾄﾗﾝｼﾞｽﾀｰ
	VSDTC143ZKA-1	AC	DJ		B	Transistor(DTC143ZKA)	[Q101,102,105,106,111,112]	ﾄﾗﾝｼﾞｽﾀｰ
	VSDTC143ZKA-1	AC	DJ		B	Transistor(DTC143ZKA)	[Q113,115,116,120,123]	ﾄﾗﾝｼﾞｽﾀｰ
76	VS2SA1807-P-1	AE	DS		B	Transistor(2SA1807)	[Q110]	ﾄﾗﾝｼﾞｽﾀｰ
77	VS2SC2412KS-1	AB	DD		B	Transistor(2SC2412KS)	[Q108,109]	ﾄﾗﾝｼﾞｽﾀｰ
78	VS2SC3415-P-1	AP	EQ		B	Transistor(2SC3415)	[Q1]	ﾄﾗﾝｼﾞｽﾀｰ
79	VS2SD1266A0-1	AF	DS		B	Transistor(2SD1266A0)	[Q2]	ﾄﾗﾝｼﾞｽﾀｰ
80	VS2SD592A-S-1	AK	DX		B	Transistor(2SD592A)	[Q3]	ﾄﾗﾝｼﾞｽﾀｰ
81	QCNCM1156FCZZ	AD	DJ		C	Connector(3pin)	[CN3]	ｺﾈｸﾀｰ
82	QSOCD0081FCZZ	AL	EB		C	Connector(6pin)	[CN1]	ｺﾈｸﾀｰ
83	RC-KZ0009QCZZ	AB	DD		C	Capacitor(50WV 0.01μF)	[C24]	ｺﾝﾃﾞﾝｻｰ
84	RRLYD3211QCZZ	AM	EG		B	Relay(G6E134PUS)	[RY5]	ﾘﾚｰ
85	RTRNP0534FCZZ	AT	EZ		B	Transformer(CIT1414EP-A)	[T3]	ﾄﾗﾝｽ
86	RTRNP2105SCZZ	AP	EQ		B	Transformer(2105)	[T1]	ﾄﾗﾝｽ
87	VCEAZA1HW225M	AB	DD		C	Capacitor(50WV 2.2μF)	[C16,22,26,29]	ｺﾝﾃﾞﾝｻｰ
88	VCFYDA1HA105J	AE	DJ		C	Capacitor(50WV 1μF)	[C13]	ｺﾝﾃﾞﾝｻｰ
89	VCFYJU2AA824K	AF	DS		C	Capacitor(100WV 0.82μF)	[C23]	ｺﾝﾃﾞﾝｻｰ
90	VCFYJU2GA473K	AC	DD		C	Capacitor(400WV 0.047μF)	[C7]	ｺﾝﾃﾞﾝｻｰ
91	VCKYCZ1AB333K	AB	DD		C	Capacitor(10WV 0.033μF)	[C38,54]	ｺﾝﾃﾞﾝｻｰ
92	VCKYCZ1HB222K	AA	DD		C	Capacitor(50WV 2200pF)	[C3]	ｺﾝﾃﾞﾝｻｰ
93	VCQYNU1HM223K	AA	DD		C	Capacitor(50WV 0.023μF)	[C15]	ｺﾝﾃﾞﾝｻｰ
95	VHiH8D3063+-1	AW	FG		B	IC(H8D3063)	[IC1]	IC

50 TEL/LIU 基板ﾕﾆｯﾄ (TEL/LIU PWB)[AR-C260F/C260FP]

NO.	PARTS CODE	PRICE RANK Ex.	PRICE RANK Ja.	NEW MARK	PART RANK	DESCRIPTION
97	VHｉTHS56F／／－1	AS	EZ		B	IC(THS56F) [IC2] IC
98	VRD－HT2EY472J	AA	DD		C	Resistor(1/4W 4.7KΩ ±5%) [R22] 抵抗
99	VRS－CZ1JD151J	AA	DD		C	Resistor(1/16W 150Ω ±1%) [R46] 抵抗
100	VRS－CZ1JD222J	AA	DD		C	Resistor(1/16W 2.2KΩ ±5%) [R45] 抵抗
101	VRS－CZ1JD331J	AA	DD		C	Resistor(1/16W 330Ω ±5%) [R16] 抵抗
102	VRS－CZ1JD363J	AA	DD		C	Resistor(1/16W 36KΩ ±5%) [R57] 抵抗
103	VRS－CZ1JD393J	AA	DD		C	Resistor(1/16W 39KΩ ±5%) [R31] 抵抗
104	VRS－CZ1JD472J	AA	DD		C	Resistor(1/16W 4.7KΩ ±5%) [R9] 抵抗
105	VRS－CZ1JD683J	AA	DD		C	Resistor(1/16W 68KΩ ±5%) [R27,42] 抵抗
106	VRS－CZ1JD821J	AA	DD		C	Resistor(1/16W 820Ω ±5%) [R64] 抵抗
107	VRS－CZ1JD822J	AA	DD		C	Resistor(1/16W 8.2KΩ ±5%) [R32] 抵抗
108	VRS－RA3AA472J	AB	DD		C	Resistor(1W 4.7KΩ ±5%) [R83] 抵抗
	(Unit)					
901	CPWBN1491FCE1	CA	TV		E	TEL/LIU PWB unit TEL/LIU 基板ﾕﾆｯﾄ

51 PCU 基板 (PCU PWB)

NO.	PARTS CODE	PRICE RANK Ex.	PRICE RANK Ja.	NEW MARK	PART RANK	DESCRIPTION
1	QCNCM0879FCZZ	AF	DS		C	Connector(28Pin) [CN17] ｺﾈｸﾀｰ
2	QCNCM0923FC10	AE	DJ		C	Connector(10pin) [CN6,CN14] ｺﾈｸﾀｰ
3	QCNCM0923FC12	AE	DJ		C	Connector(12pin) [CN10] ｺﾈｸﾀｰ
4	QCNCM0923FC16	AF	DS		C	Connector(16pin) [CN19] ｺﾈｸﾀｰ
5	QCNCM0923FC22	AF	DS		C	Connector(22pin) [CN20] ｺﾈｸﾀｰ
6	QCNCM0923FC24	AF	DS		C	Connector(24pin) [CN9] ｺﾈｸﾀｰ
7	QCNCM0923FC32	AG	DS		C	Connector(32Pin) [CN7] ｺﾈｸﾀｰ
8	QCNCM0923FC3D	AF	DS		C	Connector(B34B-PHDSS)(34pin) [CN11,CN12] ｺﾈｸﾀｰ
9	QCNCM7014SC0C	AA	DD		C	Connector(3pin) [CN1,CN3,CN5,CN8] ｺﾈｸﾀｰ
10	QCNCM7014SC0F	AB	DD		C	Connector(6pin) [CN13,CN2] ｺﾈｸﾀｰ
11	QCNCW0885FCZZ	AG	DX		C	Connector(1-171825-2) [CN4] ｺﾈｸﾀｰ
13	QCNCW1170FCZZ	AG	DS		C	Connector(28FMZ-BT) [CN16] ｺﾈｸﾀｰ
14	QSOCZ0073FCZZ	AL	EB		C	Connector(72pin) [SOCKET1] ｺﾈｸﾀｰ
15	QSOCZ6428ACZZ	AE	DS		C	IC socket(28pin) [IC22] IC ｿｹｯﾄ
16	RCRSP0071FCZZ	AH	DX	N	B	Crystal(AT-51(20.00MHz)) [X1] ｸﾘｽﾀﾙ
17	RCRSZ0001QSZZ	AG	DS		B	Crystal(AT-51(19.6608MHz)) [X2] ｸﾘｽﾀﾙ
18	RFｉLZ0004QSZZ	AM	EG		C	Filter(ZJSR5101-223) [NF5,NF4] ﾌｨﾙﾀ -
19	RFｉLZ1043LCZZ	AC	DJ		C	Filter(33000pF) [NF1,NF2,NF3] ﾌｨﾙﾀｰ
20	RH－ｉX0003QSZZ	AQ	EQ		B	IC(SRAM)(IS61LV256-12J) [IC25,IC24] IC(SRAM)
21	RMPTW4101QCJJ	AB	DD		B	Block resistor(100Ω×4) [BR15,BR19] ﾌﾞﾛｯｸﾃｲｺｳ
22	RMPTW4102QCJJ	AB	DD		B	Block resistor(1.0KΩ×4) [BR26,BR29] ﾌﾞﾛｯｸﾃｲｺｳ
	RMPTW4102QCJJ	AB	DD		B	Block resistor(1.0KΩ×4) [BR31,BR34,BR35,BR36,BR38] ﾌﾞﾛｯｸﾃｲｺｳ
23	RMPTW4103QCJJ	AB	DD		B	Block resistor(10KΩ×4) [BR21,BR24,BR41,BR42,BR43] ﾌﾞﾛｯｸﾃｲｺｳ
	RMPTW4103QCJJ	AB	DD		B	Block resistor(10KΩ×4) [BR44,BR45,BR46,BR17] ﾌﾞﾛｯｸﾃｲｺｳ
24	RMPTW4330QCJJ	AB	DD		B	Resistor arrey(33Ω×4 1/32W ±5%) [BR8,BR9] ﾃｲｺｳｱﾚｲ
	RMPTW4330QCJJ	AB	DD		B	Resistor arrey(33Ω×4 1/32W ±5%) [BR10,BR11] ﾃｲｺｳｱﾚｲ
	RMPTW4330QCJJ	AB	DD		B	Resistor arrey(33Ω×4 1/32W ±5%) [BR12,BR16,BR20] ﾃｲｺｳｱﾚｲ
	RMPTW4330QCJJ	AB	DD		B	Resistor arrey(33Ω×4 1/32W ±5%) [BR23,BR47] ﾃｲｺｳｱﾚｲ
26	RMPTW4472QCJJ	AB	DD		B	Resistor arrey(4.7kΩ×4 ±5%) [BR1,BR4,BR5,BR6,BR13] ﾃｲｺｳｱﾚｲ
	RMPTW4472QCJJ	AB	DD		B	Resistor arrey(4.7kΩ×4 ±5%) [BR14,BR27,BR28] ﾃｲｺｳｱﾚｲ
	RMPTW4472QCJJ	AB	DD		B	Resistor arrey(4.7kΩ×4 ±5%) [BR32,BR33] ﾃｲｺｳｱﾚｲ
	RMPTW4472QCJJ	AB	DD		B	Resistor arrey(4.7kΩ×4 ±5%) [BR40] ﾃｲｺｳｱﾚｲ
27	RMPTW4473QCJJ	AB	DD		B	Resistor arrey(47kΩ×4 ±5%) [BR30,BR37,BR39] ﾃｲｺｳｱﾚｲ
29	VCCCCZ1HH180J	AA	DD		C	Capacitor(50WV 18pF)(GRM36CH180J50PT) [C82,C89] ｺﾝﾃﾞﾝｻｰ
30	VCCCCZ1HH220J	AA	DD		C	Capacitor(50WV 22pF) [C84,C83] ｺﾝﾃﾞﾝｻｰ
31	VCCUCY1AJ105Z	AC	DD		C	Capacitor(10WV 1.0μF) [C105] ｺﾝﾃﾞﾝｻｰ
32	VCEAGA0JW107M	AC	DD		C	Capacitor(6.3WV 100μF) [C110] ｺﾝﾃﾞﾝｻｰ
33	VCEAGA1AW108M	AC	ZT		C	Capacitor(10WV 1000μF) [C44] ｺﾝﾃﾞﾝｻｰ
34	VCEAGA1AW477M	AB	DD		C	Capacitor(10WV 470μF) [C55] ｺﾝﾃﾞﾝｻｰ
35	VCEAZU1VW106M	AB	DD		C	Capacitor(10μF/35V)(SMG35VB-10M) [C15,C35,C40] ｺﾝﾃﾞﾝｻｰ
	VCEAZU1VW106M	AB	DD		C	Capacitor(10μF/35V)(SMG35VB-10M) [CC48,C56] ｺﾝﾃﾞﾝｻｰ
	VCEAZU1VW106M	AB	DD		C	Capacitor(10μF/35V)(SMG35VB-10M) [C58,C68,C77] ｺﾝﾃﾞﾝｻｰ
36	VCEAZU0JW338M	AE	DJ		C	Capacitor(3300μF/6.3V)(UVR0J332MPA1TD) [C60] ｺﾝﾃﾞﾝｻｰ
37	VCEAZU1VW477M	AD	DJ		C	Capacitor(35WV 470μF) [C3] ｺﾝﾃﾞﾝｻｰ
38	VCKYCY1HB223K	AC	DD		C	Capacitor(50WV 0.022μF) [C2,C4,C5,C6,C7] ｺﾝﾃﾞﾝｻｰ
	VCKYCY1HB223K	AC	DD		C	Capacitor(50WV 0.022μF) [C13,C14,C88] ｺﾝﾃﾞﾝｻｰ
39	VCKYCZ1CF104Z	AB	DD		C	Capacitor(16WV 0.1μF) [C1,C8,C9,C11,C16] ｺﾝﾃﾞﾝｻｰ
	VCKYCZ1CF104Z	AB	DD		C	Capacitor(16WV 0.1μF) [C17,C20,C23,C30,C33] ｺﾝﾃﾞﾝｻｰ
	VCKYCZ1CF104Z	AB	DD		C	Capacitor(16WV 0.1μF) [C34,C36,C37,C38,C39] ｺﾝﾃﾞﾝｻｰ
	VCKYCZ1CF104Z	AB	DD		C	Capacitor(16WV 0.1μF) [C42,C43,C45,C46,C47] ｺﾝﾃﾞﾝｻｰ
	VCKYCZ1CF104Z	AB	DD		C	Capacitor(16WV 0.1μF) [C49,C50,C52,C53,C54] ｺﾝﾃﾞﾝｻｰ
	VCKYCZ1CF104Z	AB	DD		C	Capacitor(16WV 0.1μF) [C57,C59,C61,C62,C63] ｺﾝﾃﾞﾝｻｰ
	VCKYCZ1CF104Z	AB	DD		C	Capacitor(16WV 0.1μF) [C64,C65,C66,C70] ｺﾝﾃﾞﾝｻｰ
	VCKYCZ1CF104Z	AB	DD		C	Capacitor(16WV 0.1μF) [C81,C85,C86,C87,C90] ｺﾝﾃﾞﾝｻｰ
	VCKYCZ1CF104Z	AB	DD		C	Capacitor(16WV 0.1μF) [C91,C95,C96,C97,C101] ｺﾝﾃﾞﾝｻｰ
	VCKYCZ1CF104Z	AB	DD		C	Capacitor(16WV 0.1μF) [C104,C107,C109] ｺﾝﾃﾞﾝｻｰ
	VCKYCZ1CF104Z	AB	DD		C	Capacitor(16WV 0.1μF) [C111,C112,C113,C114,C115] ｺﾝﾃﾞﾝｻｰ
	VCKYCZ1CF104Z	AB	DD		C	Capacitor(16WV 0.1μF) [C116,C118,C123,C124,C125] ｺﾝﾃﾞﾝｻｰ

51 PCU 基板 (PCU PWB)

NO.	PARTS CODE	PRICE RANK Ex.	PRICE RANK Ja.	NEW MARK	PART RANK	DESCRIPTION
39	VCKYCZ1CF104Z	AB	DD		C	Capacitor(16WV 0.1μF) [C126,C127,C139] ｺﾝﾃﾞﾝｻｰ
40	VCKYCZ1HB102K	AA	DD		C	Capacitor(50WV 1000pF) [C18,C19,C21,C22,C24] ｺﾝﾃﾞﾝｻｰ
	VCKYCZ1HB102K	AA	DD		C	Capacitor(50WV 1000pF) [C25,C26,C27,C28,C29] ｺﾝﾃﾞﾝｻｰ
	VCKYCZ1HB102K	AA	DD		C	Capacitor(50WV 1000pF) [C31,C32,C69,C71,C72] ｺﾝﾃﾞﾝｻｰ
	VCKYCZ1HB102K	AA	DD		C	Capacitor(50WV 1000pF) [C73,C74,C75,C76,C78] ｺﾝﾃﾞﾝｻｰ
	VCKYCZ1HB102K	AA	DD		C	Capacitor(50WV 1000pF) [C79] ｺﾝﾃﾞﾝｻｰ
	VCKYCZ1HB102K	AA	DD		C	Capacitor(50WV 1000pF) [C106,C108,C117] ｺﾝﾃﾞﾝｻｰ
	VCKYCZ1HB102K	AA	DD		C	Capacitor(50WV 1000pF) [C119,C120,C121,C122] ｺﾝﾃﾞﾝｻｰ
41	VHDDAN202U／−1	AB	DD		B	Diode(DAN202U) [D2,D7,D8,D9] ﾀﾞｲｵｰﾄﾞ
	VHDDAN202U／−1	AB	DD		B	Diode(DAN202U) [D21,D22] ﾀﾞｲｵｰﾄﾞ
42	VHDDAP202U／−1	AB	DD		B	Diode(DAP202U) [D10,D23] ﾀﾞｲｵｰﾄﾞ
43	VHDDSS133／／−1	AA	DD		B	Diode(1SS133) [D1,D5,D11,D12,D13,D20] ﾀﾞｲｵｰﾄﾞ
44	VHDMA704A／／−1	AC	DJ		B	Diode(MA704A) [D15,D16] ﾀﾞｲｵｰﾄﾞ
45	VHDRA13++++−1	AD	DJ		B	Diode(RA13) [D14] ﾀﾞｲｵｰﾄﾞ
46	VHERD22FB／／−1	AD	DJ		B	Zener diode(RD22FB) [D4] ﾂｴﾅｰﾀﾞｲｵｰﾄﾞ
47	VHH103AT−2／−1	AG	DS		B	Thermistor(103AT-2) [TH1] ｻｰﾐｽﾀｰ
48	VHHMSMDC014−1	AF	DS		B	Thermistor(miniSMDC014) [R71] ﾎﾟﾘｽｲｯﾁ
49	VHi65946P110C	BB	GD		B	I/O_ASIC(uPD65946GN-P11-LMU) [IC27] IC
50	VHi74VHC32MTC	AD	DJ		B	IC(74VHC32MTC) [IC9] IC
52	VHiH8S2320+−1	AY	FQ		B	IC(H8S/2320) [IC23] IC
53	VHiHC151MTC−1	AE	DJ		B	LOGIC(74HC151MTCX) [IC13,IC14,IC15,IC20] IC
54	VHiHN58V65A−1	AW	FG		B	EEPROM(HN58V65AP) [IC22] EEPROM
55	VHiLM324D++−1	AE	DJ		B	OP-AMP(LM324DR) [IC19] IC
56	VHiLM339D++−1	AE	DJ		B	IC(LM339DT) [IC17] ｺﾝﾊﾟﾚｰﾀ
57	VHiM51957BFP1	AH	DX		B	IC(M51957BFP1) [IC35,IC34] IC
59	VHiSLA7031M−1	AQ	EQ		B	IC(SLA7031M) [IC1,IC28] IC
60	VHiSLA7032M−1	AR	EQ		B	IC(SLA7032M) [IC2] IC
61	VHiTA7291AS−1	AG	DX		B	IC(TA7291AS) [IC12] IC
62	VHiTD62003AF／	AE	DS		B	IC(TD62003AF) [IC3,IC4,IC5,IC6,IC7] IC
	VHiTD62003AF／	AE	DS		B	IC(TD62003AF) [IC8,IC33] IC
63	VHiVC4051MT−1	AF	DS		B	LOGIC(74VHC4051MTCX) [IC36] IC
64	VHiVHC14MTC−1	AD	DJ		B	LOGIC(74VHC14AMTCX) [IC10,IC16,IC18,IC32] IC
65	VHiVHCT14AM−1	AE	DJ		B	LOGIC(74VHCT14AMTCX) [IC29] IC
67	VHiVT574MTC−1	AF	DS		B	LOGIC(74VHCT574AMTCX) [IC11] IC
69	VRS−CY1JD270J	AA	DD		C	Resistor(1/16W 27Ω ±5%) [R51,R38] 抵抗
70	VRS−CZ1JD000J	AA	DD		C	Resistor(1/16W 0Ω ±5%) [R18,R19,R20,R23,R46] 抵抗
	VRS−CZ1JD000J	AA	DD		C	Resistor(1/16W 0Ω ±5%) [R97,R212,R140,R142] 抵抗
71	VRS−CZ1JD101J	AA	DD		C	Resistor(1/16W 100Ω ±5%) [R69,R90,R91,R110] 抵抗
	VRS−CZ1JD101J	AA	DD		C	Resistor(1/16W 100Ω ±5%) [R124,R172,R185] 抵抗
72	VRS−CZ1JD102J	AA	DD		C	Resistor(1/16W 1KΩ ±5%) [R13,R14,R27,R31,R32] 抵抗
	VRS−CZ1JD102J	AA	DD		C	Resistor(1/16W 1KΩ ±5%) [R33,R34,R35,R39,R52] 抵抗
	VRS−CZ1JD102J	AA	DD		C	Resistor(1/16W 1KΩ ±5%) [R57,R60,R63,R66,R67] 抵抗
	VRS−CZ1JD102J	AA	DD		C	Resistor(1/16W 1KΩ ±5%) [R75,R93,R111] 抵抗
	VRS−CZ1JD102J	AA	DD		C	Resistor(1/16W 1KΩ ±5%) [R113,R153,R154] 抵抗
	VRS−CZ1JD102J	AA	DD		C	Resistor(1/16W 1KΩ ±5%) [R161,R169,R195,R196,R197] 抵抗
	VRS−CZ1JD102J	AA	DD		C	Resistor(1/16W 1KΩ ±5%) [R202,R206,R207,R209,R210] 抵抗
	VRS−CZ1JD102J	AA	DD		C	Resistor(1/16W 1KΩ ±5%) [R213,R214] 抵抗
73	VRS−CZ1JD103F	AA	DD		C	Resistor(1/16W 10KΩ ±1%) [R199] 抵抗
74	VRS−CZ1JD103J	AA	DD		C	Resistor(1/16W 10KΩ ±5%) [R47,R78,R125,R149,R150] 抵抗
	VRS−CZ1JD103J	AA	DD		C	Resistor(1/16W 10KΩ ±5%) [R151,R152,R170,R175] 抵抗
75	VRS−CZ1JD104F	AA	DD		C	Resistor(1/16W 100KΩ ±1%) [R130,R131,R198] 抵抗
76	VRS−CZ1JD104J	AA	DD		C	Resistor(1/16W 100KΩ ±5%) [R42,R54,R56,R61,R70] 抵抗
	VRS−CZ1JD104J	AA	DD		C	Resistor(1/16W 100KΩ ±5%) [R101,R116,R117] 抵抗
	VRS−CZ1JD104J	AA	DD		C	Resistor(1/16W 100KΩ ±5%) [R145,R146] 抵抗
	VRS−CZ1JD104J	AA	DD		C	Resistor(1/16W 100KΩ ±5%) [R192] 抵抗
77	VRS−CZ1JD105J	AA	DD		C	Resistor(1/16W 1.0MΩ ±5%) [R81,R89,R92,R102,R103] 抵抗
	VRS−CZ1JD105J	AA	DD		C	Resistor(1/16W 1.0MΩ ±5%) [R144] 抵抗
78	VRS−CZ1JD113F	AA	DD		C	Resistor(1/16W 11KΩ ±1%) [R168] 抵抗
79	VRS−CZ1JD162J	AA	DD		C	Resistor(1.6KJ)(MCR01MZSJ162) [R5,R106] 抵抗
80	VRS−CZ1JD201J	AA	DD		C	Resistor(1/16W 200Ω ±5%) [R109] 抵抗
81	VRS−CZ1JD202J	AA	DD		C	Resistor(1/16W 2.0KΩ ±5%) [R28] 抵抗
82	VRS−CZ1JD221J	AA	DD		C	Resistor(1/16W 220Ω ±5%) [R147] 抵抗
84	VRS−CZ1JD272J	AA	DD		C	Resistor(1/16W 2.7KΩ ±5%) [R99] 抵抗
85	VRS−CZ1JD273F	AA	DD		C	Resistor(1/16W 27KΩ ±1%)(MCR01MZSF272) [R177] 抵抗
86	VRS−CZ1JD303J	AA	DD		C	Resistor(1/16W 30KΩ ±5%)(MCR01MZSJ303) [R11,R16] 抵抗
	VRS−CZ1JD303J	AA	DD		C	Resistor(1/16W 30KΩ ±5%)(MCR01MZSJ303) [R77] 抵抗
	VRS−CZ1JD303J	AA	DD		C	Resistor(1/16W 30KΩ ±5%)(MCR01MZSJ303) [R119,R134] 抵抗
	VRS−CZ1JD303J	AA	DD		C	Resistor(1/16W 30KΩ ±5%)(MCR01MZSJ303) [R165,R184] 抵抗
87	VRS−CZ1JD330J	AA	DD		C	Resistor(1/16W 33Ω ±5%) [R50,R76,R82,R85,R95] 抵抗
	VRS−CZ1JD330J	AA	DD		C	Resistor(1/16W 33Ω ±5%) [R98,R104,R136,R137,R143] 抵抗
	VRS−CZ1JD330J	AA	DD		C	Resistor(1/16W 33Ω ±5%) [R155,R156,R157,R188,R191] 抵抗
	VRS−CZ1JD330J	AA	DD		C	Resistor(1/16W 33Ω ±5%) [R193,R43,R64,R68,R41] 抵抗
88	VRS−CZ1JD391J	AA	DD		C	Resistor(1/16W 390Ω ±5%)(MCR01MZSJ391) [R7,R108] 抵抗
89	VRS−CZ1JD472J	AA	DD		C	Resistor(1/16W 4.7KΩ ±5%) [R1,R2,R3,R10,R12] 抵抗
	VRS−CZ1JD472J	AA	DD		C	Resistor(1/16W 4.7KΩ ±5%) [R17,R24,R30,R36,R37] 抵抗
	VRS−CZ1JD472J	AA	DD		C	Resistor(1/16W 4.7KΩ ±5%) [R40,R44,R45,R49,R53] 抵抗
	VRS−CZ1JD472J	AA	DD		C	Resistor(1/16W 4.7KΩ ±5%) [R55,R58,R59,R62,R65] 抵抗
	VRS−CZ1JD472J	AA	DD		C	Resistor(1/16W 4.7KΩ ±5%) [R72,R73,R80,R83,R87] 抵抗
	VRS−CZ1JD472J	AA	DD		C	Resistor(1/16W 4.7KΩ ±5%) [R88,R112,R114,R118,R121] 抵抗
	VRS−CZ1JD472J	AA	DD		C	Resistor(1/16W 4.7KΩ ±5%) [R122,R128,R133] 抵抗

51 PCU 基板 (PCU PWB)

NO.	PARTS CODE	PRICE RANK Ex.	PRICE RANK Ja.	NEW MARK	PART RANK	DESCRIPTION
89	VRS−CZ1JD472J	AA	DD		C	Resistor(1/16W 4.7KΩ ±5%) [R148,R158] 抵抗
	VRS−CZ1JD472J	AA	DD		C	Resistor(1/16W 4.7KΩ ±5%) [R162,R171,R174] 抵抗
	VRS−CZ1JD472J	AA	DD		C	Resistor(1/16W 4.7KΩ ±5%) [R176,R186] 抵抗
	VRS−CZ1JD472J	AA	DD		C	Resistor(1/16W 4.7KΩ ±5%) [R187,R194,R201] 抵抗
	VRS−CZ1JD472J	AA	DD		C	Resistor(1/16W 4.7KΩ ±5%) [R203,R204] 抵抗
	VRS−CZ1JD472J	AA	DD		C	Resistor(1/16W 4.7KΩ ±5%) [R205,R208,R211] 抵抗
90	VRS−CZ1JD473J	AA	DD		C	Resistor(1/16W 47KΩ ±5%) [R86,R129,R189,R190] 抵抗
91	VRS−CZ1JD622J	AA	DD		C	Resistor(1/16W 6.2KΩ ±5%)(MCR01MZSJ622) [R74] 抵抗
93	VRS−CZ1JD821J	AA	DD		C	Resistor(1/16W 820Ω ±5%)(MCR01MZSJ821) [R107] 抵抗
94	VRS−TP2BD1R0J	AA	DD		C	Resistor(1/8W 1.0Ω ±5%) [R178,R179,R180,R181,R182] 抵抗
	VRS−TP2BD1R0J	AA	DD		C	Resistor(1/8W 1.0Ω ±5%) [R183] 抵抗
96	VS2SA1576A/−1	AB	DJ		B	Transistor(2SA1576A) [Q3,Q4,Q5,Q8] ﾄﾗﾝｼﾞｽﾀｰ
97	VS2SC2412K/−1	AB	DD		B	Transistor(2SC2412K) [Q39,Q35] ﾄﾗﾝｼﾞｽﾀｰ
98	VSDTA114YUA−1	AC	DJ		B	Transistor(DTA114YUA) [Q30,Q31,Q36,Q40,Q53,Q58] ﾄﾗﾝｼﾞｽﾀｰ
99	VSDTA144EUA−1	AC	DJ		B	Transistor(DTA144EUA) [Q49] ﾄﾗﾝｼﾞｽﾀｰ
100	VSDTC114YUA−1	AB	DJ		B	Transistor(DTC114YUA) [Q2,Q9,Q10,Q11,Q12] ﾄﾗﾝｼﾞｽﾀｰ
	VSDTC114YUA−1	AB	DJ		B	Transistor(DTC114YUA) [Q13,Q14,Q15,Q16,Q18] ﾄﾗﾝｼﾞｽﾀｰ
	VSDTC114YUA−1	AB	DJ		B	Transistor(DTC114YUA) [Q19,Q20,Q21,Q22,Q23] ﾄﾗﾝｼﾞｽﾀｰ
	VSDTC114YUA−1	AB	DJ		B	Transistor(DTC114YUA) [Q24,Q25,Q26,Q27,Q28] ﾄﾗﾝｼﾞｽﾀｰ
	VSDTC114YUA−1	AB	DJ		B	Transistor(DTC114YUA) [Q33,Q34,Q37,Q38] ﾄﾗﾝｼﾞｽﾀｰ
	VSDTC114YUA−1	AB	DJ		B	Transistor(DTC114YUA) [Q45,Q47] ﾄﾗﾝｼﾞｽﾀｰ
	VSDTC114YUA−1	AB	DJ		B	Transistor(DTC114YUA) [Q48,Q50,Q51,Q52,Q54] ﾄﾗﾝｼﾞｽﾀｰ
	VSDTC114YUA−1	AB	DJ		B	Transistor(DTC114YUA) [Q55,Q56,Q57,Q59] ﾄﾗﾝｼﾞｽﾀｰ
	(Unit)					
901	CPWBN1544DS51	BR	LX	N	E	PCU PWB UNIT PCU 基板ﾕﾆｯﾄ

52 MFPC2 基板 (MFPC2 PWB)

NO.	PARTS CODE	PRICE RANK Ex.	PRICE RANK Ja.	NEW MARK	PART RANK	DESCRIPTION
1	QCNCM0923FC10	AE	DJ		C	Connector(10pin) [CN9] ｺﾈｸﾀｰ
2	QCNCM0923FC14	AE	DJ		C	Connector(14pin) [CN10] ｺﾈｸﾀｰ
3	QCNCM0923FC16	AF	DS		C	Connector(16pin) [CN11] ｺﾈｸﾀｰ
4	QCNCM0923FC24	AF	DS		C	Connector(24pin) [CN12] ｺﾈｸﾀｰ
5	QCNCM0991FCZZ	AG	DX		C	Connector(30FMZ-BT) [CN3,CN13] ｺﾈｸﾀｰ
6	QCNCM1069AC1J	AD	DJ		C	Connector(10pin) [CN7] ｺﾈｸﾀｰ
7	QCNCM7014SC0F	AB	DD		C	Connector(6pin) [CN6] ｺﾈｸﾀｰ
8	QCNCW1157FCZZ	AB	DJ		C	Connector(IMSA-9604S-05C) [CN8] ｺﾈｸﾀｰ
9	QCNCW1169FCZZ	AG	DS		C	Connector(26FMZ-BT) [CN5] ｺﾈｸﾀｰ
10	QCNCW5380NCZZ	AC	DJ		C	Connector(B4B-PH-K-S) [CN14] ｺﾈｸﾀｰ
11	QSOCZ0071FCZZ	AP	EQ		C	Socket(MM20-72B1-1) [SOCKET1,SOCKET2] ｿｹｯﾄ
12	QSOCZ6428ACZZ	AE	DS		C	IC socket(28pin) [IC51] IC ｿｹｯﾄ
13	RCRSQ0072FCZZ	AF	DS		B	Crystal(22.1184MHz)(AT-51) [X1] ｸﾘｽﾀﾙ
14	RCRSQ0073FCZZ	AF	DS		B	Crystal(21.47727MHz)(AT-51) [X3] ｸﾘｽﾀﾙ
15	RCRSQ0074FCZZ	AF	DS		B	Crystal(25.69930MHz)(AT-51) [X4] ｸﾘｽﾀﾙ
16	RCRSZ0001QSZZ	AG	DS		B	Crystal(AT-51(19.6608MHz)) [X2] ｸﾘｽﾀﾙ
17	RFiLN0046FCZZ	AH	DX		C	Noise filter(ZJSC-R47121) [NF20] ﾉｲｽﾞﾌｨﾙﾀ
18	RFiLZ1042LCZZ	AC	DJ		C	Filter(1000pF) [NF3,NF10,NF11,NF13,NF15] ﾌｨﾙﾀｰ
	RFiLZ1042LCZZ	AC	DJ		C	Filter(1000pF) [NF16] ﾌｨﾙﾀｰ
19	RFiLZ1043LCZZ	AC	DJ		C	Filter(33000pF) [NF5,NF6,NF8,NF9,NF17] ﾌｨﾙﾀｰ
	RFiLZ1043LCZZ	AC	DJ		C	Filter(33000pF) [NF18,NF19,NF21,NF22] ﾌｨﾙﾀｰ
	RFiLZ1043LCZZ	AC	DJ		C	Filter(33000pF) [NF23,NF24,NF25,NF26,NF27] ﾌｨﾙﾀｰ
	RFiLZ1043LCZZ	AC	DJ		C	Filter(33000pF) [NF28,NF34,NF36,NF37,NF38] ﾌｨﾙﾀｰ
	RFiLZ1043LCZZ	AC	DJ		C	Filter(33000pF) [NF39] ﾌｨﾙﾀｰ
20	RH−iX0003QSZZ	AQ	EQ		B	IC(SRAM)(IS61LV256-12J) [IC41,IC33] IC(SRAM)
21	RH−iX3103YAZZ	AG	DS		B	REGURATOR(L1087MPX_ADJ) [IC1,IC12,IC18,IC43,IC57] IC
22	RMPTC4103QCJJ	AC	DD		B	Block resistor(10KΩ×4) [BR52,BR53,BR54,BR55,BR67] ﾌﾞﾛｯｸﾃｲｺｳ
	RMPTC4103QCJJ	AC	DD		B	Block resistor(10KΩ×4) [BR68,BR69,BR73,BR74,BR75] ﾌﾞﾛｯｸﾃｲｺｳ
	RMPTC4103QCJJ	AC	DD		B	Block resistor(10KΩ×4) [BR79,BR80,BR81,BR82,BR83] ﾌﾞﾛｯｸﾃｲｺｳ
	RMPTC4103QCJJ	AC	DD		B	Block resistor(10KΩ×4) [BR84,BR95,BR98,BR99,BR101] ﾌﾞﾛｯｸﾃｲｺｳ
	RMPTC4103QCJJ	AC	DD		B	Block resistor(10KΩ×4) [BR102,BR103,BR105,BR107] ﾌﾞﾛｯｸﾃｲｺｳ
	RMPTC4103QCJJ	AC	DD		B	Block resistor(10KΩ×4) [BR109,BR111,BR113,BR117] ﾌﾞﾛｯｸﾃｲｺｳ
	RMPTC4103QCJJ	AC	DD		B	Block resistor(10KΩ×4) [BR118,BR120,BR122,BR124] ﾌﾞﾛｯｸﾃｲｺｳ
23	RMPTC4330QCJJ	AC	DD		B	Block resistor(33Ω×4) [BR1,BR2,BR3,BR4,BR5,BR6] ﾌﾞﾛｯｸﾃｲｺｳ
	RMPTC4330QCJJ	AC	DD		B	Block resistor(33Ω×4) [BR7,BR8,BR9,BR10,BR20] ﾌﾞﾛｯｸﾃｲｺｳ
	RMPTC4330QCJJ	AC	DD		B	Block resistor(33Ω×4) [BR21,BR22,BR23,BR24,BR25] ﾌﾞﾛｯｸﾃｲｺｳ
	RMPTC4330QCJJ	AC	DD		B	Block resistor(33Ω×4) [BR26,BR27,BR28,BR29,BR30] ﾌﾞﾛｯｸﾃｲｺｳ
	RMPTC4330QCJJ	AC	DD		B	Block resistor(33Ω×4) [BR31,BR32,BR33,BR38,BR39] ﾌﾞﾛｯｸﾃｲｺｳ
	RMPTC4330QCJJ	AC	DD		B	Block resistor(33Ω×4) [BR40,BR41,BR42,BR43,BR44] ﾌﾞﾛｯｸﾃｲｺｳ
	RMPTC4330QCJJ	AC	DD		B	Block resistor(33Ω×4) [BR45,BR46,BR47,BR48,BR49] ﾌﾞﾛｯｸﾃｲｺｳ
	RMPTC4330QCJJ	AC	DD		B	Block resistor(33Ω×4) [BR50,BR51,BR56,BR57,BR58] ﾌﾞﾛｯｸﾃｲｺｳ
	RMPTC4330QCJJ	AC	DD		B	Block resistor(33Ω×4) [BR59,BR60,BR61,BR62,BR63] ﾌﾞﾛｯｸﾃｲｺｳ
	RMPTC4330QCJJ	AC	DD		B	Block resistor(33Ω×4) [BR65,BR66,BR70,BR71,BR72] ﾌﾞﾛｯｸﾃｲｺｳ
	RMPTC4330QCJJ	AC	DD		B	Block resistor(33Ω×4) [BR76,BR77,BR78,BR85,BR86] ﾌﾞﾛｯｸﾃｲｺｳ
	RMPTC4330QCJJ	AC	DD		B	Block resistor(33Ω×4) [BR87,BR88,BR89,BR90,BR91] ﾌﾞﾛｯｸﾃｲｺｳ
	RMPTC4330QCJJ	AC	DD		B	Block resistor(33Ω×4) [BR92,BR93,BR94,BR96,BR97] ﾌﾞﾛｯｸﾃｲｺｳ
	RMPTC4330QCJJ	AC	DD		B	Block resistor(33Ω×4) [BR100,BR104,BR106,BR108] ﾌﾞﾛｯｸﾃｲｺｳ

52 MFPC2 基板 (MFPC2 PWB)

NO.	PARTS CODE	PRICE RANK Ex.	PRICE RANK Ja.	NEW MARK	PART RANK	DESCRIPTION
23	RMPTC4330QCJJ	AC	DD		B	Block resistor(33Ω×4) [BR110,BR112,BR114,BR115] ﾌﾞﾛｯｸﾃｲｺｳ
	RMPTC4330QCJJ	AC	DD		B	Block resistor(33Ω×4) [BR116,BR119,BR121,BR123] ﾌﾞﾛｯｸﾃｲｺｳ
	RMPTC4330QCJJ	AC	DD		B	Block resistor(33Ω×4) [BR125,BR127,BR128,BR129] ﾌﾞﾛｯｸﾃｲｺｳ
	RMPTC4330QCJJ	AC	DD		B	Block resistor(33Ω×4) [BR130,BR131,BR132,BR133] ﾌﾞﾛｯｸﾃｲｺｳ
24	RMPTC4473QCJJ	AC	DD		B	Block resistor(47KΩ×4) [BR15,BR16,BR17,BR18,BR19] ﾌﾞﾛｯｸﾃｲｺｳ
	RMPTC4473QCJJ	AC	DD		B	Block resistor(47KΩ×4) [BR34,BR35,BR36,BR37,BR64] ﾌﾞﾛｯｸﾃｲｺｳ
	RMPTC4473QCJJ	AC	DD		B	Block resistor(47KΩ×4) [BR126] ﾌﾞﾛｯｸﾃｲｺｳ
25	VCCCCZ1HH150J	AA	DD		C	Capacitor(50WV 15pF) [C315,C316] ｺﾝﾃﾞﾝｻｰ
26	VCCCCZ1HH220J	AA	DD		C	Capacitor(50WV 22pF) [C260,C262,C391] ｺﾝﾃﾞﾝｻｰ
	VCCCCZ1HH220J	AA	DD		C	Capacitor(50WV 22pF) [C421,C454,C455] ｺﾝﾃﾞﾝｻｰ
27	VCEAEA0JW107M	AA	DD		C	Capacitor(6.3WV 100μF) [C10,C14,C30,C33,C59,C60] ｺﾝﾃﾞﾝｻｰ
	VCEAEA0JW107M	AA	DD		C	Capacitor(6.3WV 100μF) [C70,C71,C187,C191,C194] ｺﾝﾃﾞﾝｻｰ
	VCEAEA0JW107M	AA	DD		C	Capacitor(6.3WV 100μF) [C195,C268,C285,C289,C294] ｺﾝﾃﾞﾝｻｰ
	VCEAEA0JW107M	AA	DD		C	Capacitor(6.3WV 100μF) [C296,C299,C300,C314,C325] ｺﾝﾃﾞﾝｻｰ
	VCEAEA0JW107M	AA	DD		C	Capacitor(6.3WV 100μF) [C334,C361,C371,C379,C380] ｺﾝﾃﾞﾝｻｰ
	VCEAEA0JW107M	AA	DD		C	Capacitor(6.3WV 100μF) [C401,C405,C409,C444,C447] ｺﾝﾃﾞﾝｻｰ
	VCEAEA0JW107M	AA	DD		C	Capacitor(6.3WV 100μF) [C451,C574] ｺﾝﾃﾞﾝｻｰ
28	VCEAGA1AW476M	AA	DD		C	Capacitor(10WV 47μF) [C224,C393,C425,C461,C462] ｺﾝﾃﾞﾝｻｰ
	VCEAGA1AW476M	AA	DD		C	Capacitor(10WV 47μF) [C463,C464,C465,C466] ｺﾝﾃﾞﾝｻｰ
29	VCEAGA1AW477M	AB	DD		C	Capacitor(10WV 470μF) [C4,C5,C62,C64,C220,C222] ｺﾝﾃﾞﾝｻｰ
	VCEAGA1AW477M	AB	DD		C	Capacitor(10WV 470μF) [C305,C307,C395,C429,C474] ｺﾝﾃﾞﾝｻｰ
30	VCEAGA1CW106M	AA	DD		C	Capacitor(16WV 10μF) [C6,C61,C150,C225,C426] ｺﾝﾃﾞﾝｻｰ
	VCEAGA1CW106M	AA	DD		C	Capacitor(16WV 10μF) [C572,C573] ｺﾝﾃﾞﾝｻｰ
31	VCEAGA1CW107M	AC	DD		C	Capacitor(100μF/16V) [C411,C446] ｺﾝﾃﾞﾝｻｰ
32	VCEAGA1HW224M	AA	DD		C	Capacitor(50WV 0.22μF) [C357,C399] ｺﾝﾃﾞﾝｻｰ
33	VCEAGA1VW107M	AB	DD		C	Capacitor(35WV 100μF) [C410,C570] ｺﾝﾃﾞﾝｻｰ
34	VCEAGA1VW227M	AB	DD		C	Capacitor(35WV 220μF) [C352,C398,C404,C438,C478] ｺﾝﾃﾞﾝｻｰ
	VCEAGA1VW227M	AB	DD		C	Capacitor(35WV 220μF) [C569] ｺﾝﾃﾞﾝｻｰ
35	VCKYCY1HF223Z	AA	DD		C	Capacitor(50WV 0.022μF) [C212,C400,C427,C483,C364] ｺﾝﾃﾞﾝｻｰ
36	VCKYCZ1CF104Z	AB	DD		C	Capacitor(16WV 0.1μF) [C3,C7,C8,C9,C11,C12,C13] ｺﾝﾃﾞﾝｻｰ
	VCKYCZ1CF104Z	AB	DD		C	Capacitor(16WV 0.1μF) [C15,C16,C17,C18,C19,C20] ｺﾝﾃﾞﾝｻｰ
	VCKYCZ1CF104Z	AB	DD		C	Capacitor(16WV 0.1μF) [C21,C22,C23,C24,C25,C26] ｺﾝﾃﾞﾝｻｰ
	VCKYCZ1CF104Z	AB	DD		C	Capacitor(16WV 0.1μF) [C27,C28,C29,C34,C35,C36] ｺﾝﾃﾞﾝｻｰ
	VCKYCZ1CF104Z	AB	DD		C	Capacitor(16WV 0.1μF) [C37,C38,C39,C40,C41,C42] ｺﾝﾃﾞﾝｻｰ
	VCKYCZ1CF104Z	AB	DD		C	Capacitor(16WV 0.1μF) [C43,C44,C45,C46,C47,C48] ｺﾝﾃﾞﾝｻｰ
	VCKYCZ1CF104Z	AB	DD		C	Capacitor(16WV 0.1μF) [C49,C50,C51,C52,C53,C54] ｺﾝﾃﾞﾝｻｰ
	VCKYCZ1CF104Z	AB	DD		C	Capacitor(16WV 0.1μF) [C55,C56,C57,C58,C63,C65] ｺﾝﾃﾞﾝｻｰ
	VCKYCZ1CF104Z	AB	DD		C	Capacitor(16WV 0.1μF) [C72,C73,C74,C75,C76,C77] ｺﾝﾃﾞﾝｻｰ
	VCKYCZ1CF104Z	AB	DD		C	Capacitor(16WV 0.1μF) [C78,C79,C80,C81,C82,C83] ｺﾝﾃﾞﾝｻｰ
	VCKYCZ1CF104Z	AB	DD		C	Capacitor(16WV 0.1μF) [C84,C85,C86,C87,C88,C89] ｺﾝﾃﾞﾝｻｰ
	VCKYCZ1CF104Z	AB	DD		C	Capacitor(16WV 0.1μF) [C90,C91,C92,C93,C94,C95] ｺﾝﾃﾞﾝｻｰ
	VCKYCZ1CF104Z	AB	DD		C	Capacitor(16WV 0.1μF) [C97,C99,C100,C102,C103] ｺﾝﾃﾞﾝｻｰ
	VCKYCZ1CF104Z	AB	DD		C	Capacitor(16WV 0.1μF) [C104,C105,C106,C107,C108] ｺﾝﾃﾞﾝｻｰ
	VCKYCZ1CF104Z	AB	DD		C	Capacitor(16WV 0.1μF) [C109,C111,C112,C113,C114] ｺﾝﾃﾞﾝｻｰ
	VCKYCZ1CF104Z	AB	DD		C	Capacitor(16WV 0.1μF) [C115,C116,C117,C118,C119] ｺﾝﾃﾞﾝｻｰ
	VCKYCZ1CF104Z	AB	DD		C	Capacitor(16WV 0.1μF) [C120,C121,C122,C123,C124] ｺﾝﾃﾞﾝｻｰ
	VCKYCZ1CF104Z	AB	DD		C	Capacitor(16WV 0.1μF) [C125,C126,C127,C128,C129] ｺﾝﾃﾞﾝｻｰ
	VCKYCZ1CF104Z	AB	DD		C	Capacitor(16WV 0.1μF) [C130,C131,C132,C133,C134] ｺﾝﾃﾞﾝｻｰ
	VCKYCZ1CF104Z	AB	DD		C	Capacitor(16WV 0.1μF) [C135,C136,C137,C138,C139] ｺﾝﾃﾞﾝｻｰ
	VCKYCZ1CF104Z	AB	DD		C	Capacitor(16WV 0.1μF) [C140,C141,C142,C149,C151] ｺﾝﾃﾞﾝｻｰ
	VCKYCZ1CF104Z	AB	DD		C	Capacitor(16WV 0.1μF) [C152,C153,C154,C155,C156] ｺﾝﾃﾞﾝｻｰ
	VCKYCZ1CF104Z	AB	DD		C	Capacitor(16WV 0.1μF) [C157,C158,C159,C160,C161] ｺﾝﾃﾞﾝｻｰ
	VCKYCZ1CF104Z	AB	DD		C	Capacitor(16WV 0.1μF) [C162,C163,C164,C165,C166] ｺﾝﾃﾞﾝｻｰ
	VCKYCZ1CF104Z	AB	DD		C	Capacitor(16WV 0.1μF) [C167,C168,C169,C171,C172] ｺﾝﾃﾞﾝｻｰ
	VCKYCZ1CF104Z	AB	DD		C	Capacitor(16WV 0.1μF) [C173,C174,C175,C176,C182] ｺﾝﾃﾞﾝｻｰ
	VCKYCZ1CF104Z	AB	DD		C	Capacitor(16WV 0.1μF) [C183,C184,C185,C186,C188] ｺﾝﾃﾞﾝｻｰ
	VCKYCZ1CF104Z	AB	DD		C	Capacitor(16WV 0.1μF) [C189,C190,C192,C193,C197] ｺﾝﾃﾞﾝｻｰ
	VCKYCZ1CF104Z	AB	DD		C	Capacitor(16WV 0.1μF) [C198,C199,C200,C201,C202] ｺﾝﾃﾞﾝｻｰ
	VCKYCZ1CF104Z	AB	DD		C	Capacitor(16WV 0.1μF) [C203,C205,C206,C207,C208] ｺﾝﾃﾞﾝｻｰ
	VCKYCZ1CF104Z	AB	DD		C	Capacitor(16WV 0.1μF) [C209,C210,C211,C216,C218] ｺﾝﾃﾞﾝｻｰ
	VCKYCZ1CF104Z	AB	DD		C	Capacitor(16WV 0.1μF) [C221,C223,C228,C230,C231] ｺﾝﾃﾞﾝｻｰ
	VCKYCZ1CF104Z	AB	DD		C	Capacitor(16WV 0.1μF) [C234,C236,C237,C244,C246] ｺﾝﾃﾞﾝｻｰ
	VCKYCZ1CF104Z	AB	DD		C	Capacitor(16WV 0.1μF) [C248,C249,C250,C252] ｺﾝﾃﾞﾝｻｰ
	VCKYCZ1CF104Z	AB	DD		C	Capacitor(16WV 0.1μF) [C254,C261,C263,C267] ｺﾝﾃﾞﾝｻｰ
	VCKYCZ1CF104Z	AB	DD		C	Capacitor(16WV 0.1μF) [C269,C270,C271,C275,C277] ｺﾝﾃﾞﾝｻｰ
	VCKYCZ1CF104Z	AB	DD		C	Capacitor(16WV 0.1μF) [C278,C279,C280,C281,C282] ｺﾝﾃﾞﾝｻｰ
	VCKYCZ1CF104Z	AB	DD		C	Capacitor(16WV 0.1μF) [C283,C284,C286,C287,C288] ｺﾝﾃﾞﾝｻｰ
	VCKYCZ1CF104Z	AB	DD		C	Capacitor(16WV 0.1μF) [C290,C291,C292,C293,C295] ｺﾝﾃﾞﾝｻｰ
	VCKYCZ1CF104Z	AB	DD		C	Capacitor(16WV 0.1μF) [C297,C298,C304,C306] ｺﾝﾃﾞﾝｻｰ
	VCKYCZ1CF104Z	AB	DD		C	Capacitor(16WV 0.1μF) [C313,C318,C319,C320,C321] ｺﾝﾃﾞﾝｻｰ
	VCKYCZ1CF104Z	AB	DD		C	Capacitor(16WV 0.1μF) [C322,C324,C327,C328,C329] ｺﾝﾃﾞﾝｻｰ
	VCKYCZ1CF104Z	AB	DD		C	Capacitor(16WV 0.1μF) [C333,C335,C336,C337,C339] ｺﾝﾃﾞﾝｻｰ
	VCKYCZ1CF104Z	AB	DD		C	Capacitor(16WV 0.1μF) [C340,C341,C342,C343,C344] ｺﾝﾃﾞﾝｻｰ
	VCKYCZ1CF104Z	AB	DD		C	Capacitor(16WV 0.1μF) [C345,C346,C347,C348,C350] ｺﾝﾃﾞﾝｻｰ
	VCKYCZ1CF104Z	AB	DD		C	Capacitor(16WV 0.1μF) [C351,C358,C359,C360,C362] ｺﾝﾃﾞﾝｻｰ
	VCKYCZ1CF104Z	AB	DD		C	Capacitor(16WV 0.1μF) [C363,C366,C367,C368,C369] ｺﾝﾃﾞﾝｻｰ
	VCKYCZ1CF104Z	AB	DD		C	Capacitor(16WV 0.1μF) [C370,C373,C375,C381,C382] ｺﾝﾃﾞﾝｻｰ
	VCKYCZ1CF104Z	AB	DD		C	Capacitor(16WV 0.1μF) [C383,C384,C385,C386,C387] ｺﾝﾃﾞﾝｻｰ
	VCKYCZ1CF104Z	AB	DD		C	Capacitor(16WV 0.1μF) [C388,C389,C390,C392,C394] ｺﾝﾃﾞﾝｻｰ
	VCKYCZ1CF104Z	AB	DD		C	Capacitor(16WV 0.1μF) [C396,C397,C402,C403,C407] ｺﾝﾃﾞﾝｻｰ

52 MFPC2 基板 (MFPC2 PWB)

NO.	PARTS CODE	PRICE RANK Ex.	PRICE RANK Ja.	NEW MARK	PART RANK	DESCRIPTION		
36	VCKYCZ1CF104Z	AB	DD		C	Capacitor(16WV 0.1μF)	[C408,C412,C413,C414,C415]	ｺﾝﾃﾞﾝｻｰ
	VCKYCZ1CF104Z	AB	DD		C	Capacitor(16WV 0.1μF)	[C416,C417,C419,C420,C423]	ｺﾝﾃﾞﾝｻｰ
	VCKYCZ1CF104Z	AB	DD		C	Capacitor(16WV 0.1μF)	[C424,C428,C430,C431,C432]	ｺﾝﾃﾞﾝｻｰ
	VCKYCZ1CF104Z	AB	DD		C	Capacitor(16WV 0.1μF)	[C439,C440,C445,C448,C449]	ｺﾝﾃﾞﾝｻｰ
	VCKYCZ1CF104Z	AB	DD		C	Capacitor(16WV 0.1μF)	[C450,C452,C453,C458,C460]	ｺﾝﾃﾞﾝｻｰ
	VCKYCZ1CF104Z	AB	DD		C	Capacitor(16WV 0.1μF)	[C467,C468,C475,C479,C482]	ｺﾝﾃﾞﾝｻｰ
	VCKYCZ1CF104Z	AB	DD		C	Capacitor(16WV 0.1μF)	[C485,C487,C488,C490,C491]	ｺﾝﾃﾞﾝｻｰ
	VCKYCZ1CF104Z	AB	DD		C	Capacitor(16WV 0.1μF)	[C492,C493,C494,C496,C497]	ｺﾝﾃﾞﾝｻｰ
	VCKYCZ1CF104Z	AB	DD		C	Capacitor(16WV 0.1μF)	[C498,C499,C500,C501,C503]	ｺﾝﾃﾞﾝｻｰ
	VCKYCZ1CF104Z	AB	DD		C	Capacitor(16WV 0.1μF)	[C505,C506,C507,C509,C510]	ｺﾝﾃﾞﾝｻｰ
	VCKYCZ1CF104Z	AB	DD		C	Capacitor(16WV 0.1μF)	[C513,C514,C515,C516,C517]	ｺﾝﾃﾞﾝｻｰ
	VCKYCZ1CF104Z	AB	DD		C	Capacitor(16WV 0.1μF)	[C518,C520,C521,C522,C523]	ｺﾝﾃﾞﾝｻｰ
	VCKYCZ1CF104Z	AB	DD		C	Capacitor(16WV 0.1μF)	[C524,C525,C527,C529,C530]	ｺﾝﾃﾞﾝｻｰ
	VCKYCZ1CF104Z	AB	DD		C	Capacitor(16WV 0.1μF)	[C531,C533,C534,C537,C538]	ｺﾝﾃﾞﾝｻｰ
	VCKYCZ1CF104Z	AB	DD		C	Capacitor(16WV 0.1μF)	[C539,C540,C541,C542,C544]	ｺﾝﾃﾞﾝｻｰ
	VCKYCZ1CF104Z	AB	DD		C	Capacitor(16WV 0.1μF)	[C545,C546,C547,C548,C549]	ｺﾝﾃﾞﾝｻｰ
	VCKYCZ1CF104Z	AB	DD		C	Capacitor(16WV 0.1μF)	[C551,C553,C554,C555,C557]	ｺﾝﾃﾞﾝｻｰ
	VCKYCZ1CF104Z	AB	DD		C	Capacitor(16WV 0.1μF)	[C558,C560,C579,C580]	ｺﾝﾃﾞﾝｻｰ
37	VCKYCZ1EB472K	AA	DD		C	Capacitor(25WV 4700p(1005))	[C470]	ｺﾝﾃﾞﾝｻｰ
38	VCKYCZ1HB102K	AA	DD		C	Capacitor(50WV 1000pF)	[C110,C144,C145,C146,C170]	ｺﾝﾃﾞﾝｻｰ
	VCKYCZ1HB102K	AA	DD		C	Capacitor(50WV 1000pF)	[C196,C204,C213,C214,C215]	ｺﾝﾃﾞﾝｻｰ
	VCKYCZ1HB102K	AA	DD		C	Capacitor(50WV 1000pF)	[C217,C219,C238,C247,C251]	ｺﾝﾃﾞﾝｻｰ
	VCKYCZ1HB102K	AA	DD		C	Capacitor(50WV 1000pF)	[C253,C255,C256,C257,C259]	ｺﾝﾃﾞﾝｻｰ
	VCKYCZ1HB102K	AA	DD		C	Capacitor(50WV 1000pF)	[C301,C302,C303,C323]	ｺﾝﾃﾞﾝｻｰ
	VCKYCZ1HB102K	AA	DD		C	Capacitor(50WV 1000pF)	[C326,C331,C338,C353,C354]	ｺﾝﾃﾞﾝｻｰ
	VCKYCZ1HB102K	AA	DD		C	Capacitor(50WV 1000pF)	[C355,C356,C372,C374]	ｺﾝﾃﾞﾝｻｰ
	VCKYCZ1HB102K	AA	DD		C	Capacitor(50WV 1000pF)	[C406,C418,C433,C434,C435]	ｺﾝﾃﾞﾝｻｰ
	VCKYCZ1HB102K	AA	DD		C	Capacitor(50WV 1000pF)	[C436,C441,C442,C471,C473]	ｺﾝﾃﾞﾝｻｰ
	VCKYCZ1HB102K	AA	DD		C	Capacitor(50WV 1000pF)	[C476,C477,C486,C504,C528]	ｺﾝﾃﾞﾝｻｰ
	VCKYCZ1HB102K	AA	DD		C	Capacitor(50WV 1000pF)	[C552,C561,C562,C563,C564]	ｺﾝﾃﾞﾝｻｰ
	VCKYCZ1HB102K	AA	DD		C	Capacitor(50WV 1000pF)	[C565,C566,C567,C568]	ｺﾝﾃﾞﾝｻｰ
	VCKYCZ1HB102K	AA	DD		C	Capacitor(50WV 1000pF)	[C1,C2,C66,C67,C68]	ｺﾝﾃﾞﾝｻｰ
	VCKYCZ1HB102K	AA	DD		C	Capacitor(50WV 1000pF)	[C308,C365]	ｺﾝﾃﾞﾝｻｰ
39	VCKYCZ1HF103Z	AA	DD		C	Capacitor(0.01μF/50V)	[C143,C147,C148,C226,C227]	ｺﾝﾃﾞﾝｻｰ
	VCKYCZ1HF103Z	AA	DD		C	Capacitor(0.01μF/50V)	[C229,C232,C233,C235,C312]	ｺﾝﾃﾞﾝｻｰ
	VCKYCZ1HF103Z	AA	DD		C	Capacitor(0.01μF/50V)	[C349,C437,C443,C480,C571]	ｺﾝﾃﾞﾝｻｰ
40	VCKYTQ0JF106Z	AD	DJ		C	Capacitor(6.3WV 10μF)	[C484,C489,C495,C502,C508]	ｺﾝﾃﾞﾝｻｰ
	VCKYTQ0JF106Z	AD	DJ		C	Capacitor(6.3WV 10μF)	[C512,C519,C526,C532,C536]	ｺﾝﾃﾞﾝｻｰ
	VCKYTQ0JF106Z	AD	DJ		C	Capacitor(6.3WV 10μF)	[C543,C550,C556]	ｺﾝﾃﾞﾝｻｰ
41	VHDDAN202U/-1	AB	DD		B	Diode(DAN202U)	[D1,D2,D7,D8,D11,D15,D18]	ﾀﾞｲｵｰﾄﾞ
	VHDDAN202U/-1	AB	DD		B	Diode(DAN202U)	[D21,D23,D31,D34,D36,D38]	ﾀﾞｲｵｰﾄﾞ
	VHDDAN202U/-1	AB	DD		B	Diode(DAN202U)	[D39,D40,D42,D55,D56,D57]	ﾀﾞｲｵｰﾄﾞ
42	VHDDAP202U/-1	AB	DD		B	Diode(DAP202U)	[D3,D4,D9,D10,D12,D14,D17]	ﾀﾞｲｵｰﾄﾞ
	VHDDAP202U/-1	AB	DD		B	Diode(DAP202U)	[D20,D22,D30,D32,D35,D37]	ﾀﾞｲｵｰﾄﾞ
	VHDDAP202U/-1	AB	DD		B	Diode(DAP202U)	[D41,D43,D44,D45,D52,D53]	ﾀﾞｲｵｰﾄﾞ
	VHDDAP202U/-1	AB	DD		B	Diode(DAP202U)	[D54]	ﾀﾞｲｵｰﾄﾞ
43	VHDDSS133//-1	AA	DD		B	Diode(1SS133)	[D5,D6,D13,D25,D26,D27]	ﾀﾞｲｵｰﾄﾞ
	VHDDSS133//-1	AA	DD		B	Diode(1SS133)	[D28,D29,D33,D60]	ﾀﾞｲｵｰﾄﾞ
44	VHDM1FS4///-1	AD	DJ		B	Diode(M1FS4)	[D46,D47,D48,D49,D50,D51]	ﾀﾞｲｵｰﾄﾞ
	VHDM1FS4///-1	AD	DJ		B	Diode(M1FS4)	[D58,D59]	ﾀﾞｲｵｰﾄﾞ
45	VHDMA704A//-1	AC	DJ		B	Diode(MA704A)	[D16]	ﾀﾞｲｵｰﾄﾞ
46	VHDRA13++++-1	AD	DJ		B	Diode(RA13)	[D24]	ﾀﾞｲｵｰﾄﾞ
47	VHEHZS3B1//-1	AC	DJ		B	Zener diode(HZS3B1)	[ZD1]	ﾂｪﾅｰﾀﾞｲｵｰﾄﾞ
48	VHi161622FH1C	BA	FX		B	FCRAM(MB81E161622)	[IC3,IC5,IC13]	FCRAM
49	VHi61LV6416-1	AX	FG		B	SRAM(IS61LV6416(TSOP))	[IC50]	SRAM
50	VHi74LCX08MTC	AE	DJ		B	IC(74LCX08MTC)	[IC49]	IC
51	VHi74LCX14MTC	AE	DJ		B	IC(74LCX14MTC)	[IC11,IC17,IC22]	IC
	VHi74LCX14MTC	AE	DJ		B	IC(74LCX14MTC)	[IC32,IC39,IC48]	IC
52	VHi74LCX244MT	AM	DX		B	IC(74LCX244MT)	[IC14,IC25,IC27,IC34,IC35]	IC
53	VHi74LCX245MT	AM	DX		B	IC(74LCX245MT)	[IC42]	IC
54	VHi74VHC08/-1	AE	DS		B	IC(74VHC08)	[IC26]	IC
56	VHi90C363A+-1	AU	FG		B	LVDS(DS90C363AMTD)	[IC19]	IC
58	VHiH8S2320+-1	AY	FQ		B	IC(H8S/2320)	[IC31,IC23]	IC
59	VHiHG73C095-1	AY	FQ		B	CCDC(HG73C095TE)	[IC45]	IC
60	VHiHN58V65A-1	AW	FG		B	EEPROM(HN58V65AP)	[IC51]	EEPROM
61	VHiLM358DR+-1	AF	DS		B	IC(LM358D)	[IC16,IC38]	IC
62	VHiLM98513+-1	AY	FQ		B	A/D CONVERTER(LM98513)	[IC54,IC55,IC56]	IC
63	VHiM51957BFP1	AH	DX		B	IC(M51957BFP1)	[IC21,IC40]	IC
64	VHiM87J8310-1	BQ	LP		B	CPT-ASIC(208 QFP)(208 QFP)	[IC15]	IC
65	VHiM87L4240-1	BG	GT		B	ASIC-A(MB87L4240PMT-G-BND(208QFP))	[IC10]	IC
66	VHiM87M1290-1	BZ	TF		B	ASIC-B(MB87M1290PFVS-G-BND(304QFP))	[IC6]	IC
67	VHiMBLV064N-1	BA	FX		B	ROM(NAND (MBM30LV0064-PFTN))	[IC2]	色補正 ROM
68	VHiMTD2007F-1	AU	EZ		B	IC(MTD2007F)	[IC53]	IC
70	VHiSD8M16L1-1	BB	GD		B	SDRAM(HY57V281620HCT-P)	[IC37]	SDRAM
71	VHiTD62003AF/	AE	DS		B	IC(TD62003AF)	[IC44]	IC
72	VHiTD62503F/-	AG	DX		B	IC(TD62503F)	[IC28,IC29]	IC
73	VHiUPD85632-1	BM	HV		B	SCN-ASIC(240 QFP)(240 QFP)	[IC36]	IC
74	VHiUPD85658-1	BV	RB		B	ASIC-C(240 QFP(UPD85658GN-011-LMU))	[IC9]	IC
75	VHPLT1F67AF-1	AC	DJ		B	LED(LT1F67AF)	[LED1,LED2]	LED
76	VRS-CZ1JD000J	AA	DD		C	Resistor(1/16W 0Ω ±5%)	[R48,R57,R62,R110]	抵抗

52 MFPC2 基板 (MFPC2 PWB)

NO.	PARTS CODE	PRICE RANK Ex.	PRICE RANK Ja.	NEW MARK	PART RANK	DESCRIPTION
76	VRS−CZ1JD000J	AA	DD		C	Resistor(1/16W 0Ω ±5%) [R88,R144,R170] 抵抗
	VRS−CZ1JD000J	AA	DD		C	Resistor(1/16W 0Ω ±5%) [R171,R180,R198,R199,R200] 抵抗
	VRS−CZ1JD000J	AA	DD		C	Resistor(1/16W 0Ω ±5%) [R201,R202,R223,R229,R233] 抵抗
	VRS−CZ1JD000J	AA	DD		C	Resistor(1/16W 0Ω ±5%) [R248,R249,R251,R256,R262] 抵抗
	VRS−CZ1JD000J	AA	DD		C	Resistor(1/16W 0Ω ±5%) [R263,R265,R270,R276,R277] 抵抗
	VRS−CZ1JD000J	AA	DD		C	Resistor(1/16W 0Ω ±5%) [R279,R284,R130] 抵抗
77	VRS−CZ1JD101J	AA	DD		C	Resistor(1/16W 100Ω ±5%) [R131] 抵抗
78	VRS−CZ1JD102J	AA	DD		C	Resistor(1/16W 1KΩ ±5%) [R1,R2,R4,R15,R16,R25,R90] 抵抗
	VRS−CZ1JD102J	AA	DD		C	Resistor(1/16W 1KΩ ±5%) [R91,R92,R124,R125,R126] 抵抗
	VRS−CZ1JD102J	AA	DD		C	Resistor(1/16W 1KΩ ±5%) [R127,R184,R186,R235] 抵抗
79	VRS−CZ1JD103F	AA	DD		C	Resistor(1/16W 10KΩ ±1%) [R43] 抵抗
80	VRS−CZ1JD103J	AA	DD		C	Resistor(1/16W 10KΩ ±5%) [R12,R26,R27,R28,R45,R51] 抵抗
	VRS−CZ1JD103J	AA	DD		C	Resistor(1/16W 10KΩ ±5%) [R58,R65,R69,R85] 抵抗
	VRS−CZ1JD103J	AA	DD		C	Resistor(1/16W 10KΩ ±5%) [R87,R95,R102] 抵抗
	VRS−CZ1JD103J	AA	DD		C	Resistor(1/16W 10KΩ ±5%) [R111,R113,R115,R128] 抵抗
	VRS−CZ1JD103J	AA	DD		C	Resistor(1/16W 10KΩ ±5%) [R129,R132,R133,R136,R137] 抵抗
	VRS−CZ1JD103J	AA	DD		C	Resistor(1/16W 10KΩ ±5%) [R138,R140,R156,R157,R158] 抵抗
	VRS−CZ1JD103J	AA	DD		C	Resistor(1/16W 10KΩ ±5%) [R191,R193,R195,R196,R243] 抵抗
	VRS−CZ1JD103J	AA	DD		C	Resistor(1/16W 10KΩ ±5%) [R244,R245,R257,R271,R285] 抵抗
	VRS−CZ1JD103J	AA	DD		C	Resistor(1/16W 10KΩ ±5%) [R288,R289,R291] 抵抗
81	VRS−CZ1JD105J	AA	DD		C	Resistor(1/16W 1.0MΩ ±5%) [R121,R179,R222] 抵抗
83	VRS−CZ1JD122J	AA	DD		C	Resistor(1/16W 1.2KΩ ±5%) [R30,R31,R32] 抵抗
	VRS−CZ1JD122J	AA	DD		C	Resistor(1/16W 1.2KΩ ±5%) [R33,R41,R154] 抵抗
	VRS−CZ1JD122J	AA	DD		C	Resistor(1/16W 1.2KΩ ±5%) [R155] 抵抗
84	VRS−CZ1JD123J	AA	DD		C	Resistor(1/16W 12KΩ ±5%) [R42] 抵抗
85	VRS−CZ1JD133J	AA	DD		C	Resistor(1/16W 13KΩ ±5%) [R231] 抵抗
86	VRS−CZ1JD152J	AA	DD		C	Resistor(1/16W 1.5KΩ ±5%) [R17,R22,R40] 抵抗
88	VRS−CZ1JD203F	AA	DD		C	Resistor(1/16W 20KΩ ±1%) [R44] 抵抗
89	VRS−CZ1JD203J	AA	DD		C	Resistor(1/16W 20KΩ ±5%) [R183,R185,R234] 抵抗
90	VRS−CZ1JD220J	AA	DD		C	Resistor(1/16W 22Ω ±5%) [R162,R166,R167,R168,R206] 抵抗
	VRS−CZ1JD220J	AA	DD		C	Resistor(1/16W 22Ω ±5%) [R209,R211,R212] 抵抗
91	VRS−CZ1JD221J	AA	DD		C	Resistor(1/16W 220Ω ±5%) [R78,R292,R293] 抵抗
92	VRS−CZ1JD242J	AA	DD		C	Resistor(1/16W 2.4KΩ ±5%) [R29,R230,R232] 抵抗
93	VRS−CZ1JD303J	AA	DD		C	Resistor(1/16W 30KΩ ±5%) [R89] 抵抗
94	VRS−CZ1JD330J	AA	DD		C	Resistor(1/16W 33Ω ±5%) [R134,R135,R139,R141] 抵抗
	VRS−CZ1JD330J	AA	DD		C	Resistor(1/16W 33Ω ±5%) [R187,R189] 抵抗
	VRS−CZ1JD330J	AA	DD		C	Resistor(1/16W 33Ω ±5%) [R319,R320,R321,R322,R323] 抵抗
	VRS−CZ1JD330J	AA	DD		C	Resistor(1/16W 33Ω ±5%) [R324,R62,R110] 抵抗
95	VRS−CZ1JD331J	AA	DD		C	Resistor(1/16W 330Ω ±5%) [R123,R150,R221] 抵抗
96	VRS−CZ1JD332F	AA	DD		C	Resistor(1/16W 3.3KΩ ±1%) [R120,R119] 抵抗
97	VRS−CZ1JD362J	AA	DD		C	Resistor(1/16W 3.6KΩ ±5%) [R294,R295,R296] 抵抗
	VRS−CZ1JD362J	AA	DD		C	Resistor(1/16W 3.6KΩ ±5%) [R297,R298] 抵抗
	VRS−CZ1JD362J	AA	DD		C	Resistor(1/16W 3.6KΩ ±5%) [R299,R300,R301] 抵抗
	VRS−CZ1JD362J	AA	DD		C	Resistor(1/16W 3.6KΩ ±5%) [R302,R304] 抵抗
	VRS−CZ1JD362J	AA	DD		C	Resistor(1/16W 3.6KΩ ±5%) [R305,R306,R307] 抵抗
	VRS−CZ1JD362J	AA	DD		C	Resistor(1/16W 3.6KΩ ±5%) [R308,R309] 抵抗
	VRS−CZ1JD362J	AA	DD		C	Resistor(1/16W 3.6KΩ ±5%) [R310,R311,R312] 抵抗
98	VRS−CZ1JD470J	AA	DD		C	Resistor(1/16W 47Ω ±5%) [R3,R5,R6,R18,R20,R21,R36] 抵抗
	VRS−CZ1JD470J	AA	DD		C	Resistor(1/16W 47Ω ±5%) [R37,R38,R39,R49,R80,R83] 抵抗
	VRS−CZ1JD470J	AA	DD		C	Resistor(1/16W 47Ω ±5%) [R84,R86,R116,R142,R159] 抵抗
	VRS−CZ1JD470J	AA	DD		C	Resistor(1/16W 47Ω ±5%) [R192,R194,R204,R205,R214] 抵抗
	VRS−CZ1JD470J	AA	DD		C	Resistor(1/16W 47Ω ±5%) [R220,R226,R227] 抵抗
	VRS−CZ1JD470J	AA	DD		C	Resistor(1/16W 47Ω ±5%) [R325,R326] 抵抗
99	VRS−CZ1JD471J	AA	DD		C	Resistor(1/16W 470Ω ±5%) [R203,R213,R225,R259,R273] 抵抗
	VRS−CZ1JD471J	AA	DD		C	Resistor(1/16W 470Ω ±5%) [R287] 抵抗
100	VRS−CZ1JD472F	AA	DD		C	Resistor(1/16W 4.7kΩ ±1%)(MCR01MZSF472) [R122,R118] 抵抗
101	VRS−CZ1JD472J	AA	DD		C	Resistor(1/16W 4.7KΩ ±5%) [R53,R54,R55] 抵抗
	VRS−CZ1JD472J	AA	DD		C	Resistor(1/16W 4.7KΩ ±5%) [R93,R94,R105] 抵抗
	VRS−CZ1JD472J	AA	DD		C	Resistor(1/16W 4.7KΩ ±5%) [R107,R112,R188] 抵抗
	VRS−CZ1JD472J	AA	DD		C	Resistor(1/16W 4.7KΩ ±5%) [R190,R239] 抵抗
	VRS−CZ1JD472J	AA	DD		C	Resistor(1/16W 4.7KΩ ±5%) [R240,R241,R242] 抵抗
102	VRS−CZ1JD473J	AA	DD		C	Resistor(1/16W 47KΩ ±5%) [R19,R59,R60,R61,R81,R114] 抵抗
	VRS−CZ1JD473J	AA	DD		C	Resistor(1/16W 47KΩ ±5%) [R117,R145,R147,R149,R160] 抵抗
	VRS−CZ1JD473J	AA	DD		C	Resistor(1/16W 47KΩ ±5%) [R161,R164,R165,R169] 抵抗
105	VRS−HT3DAR51J	AC	DD		C	Resistor(2W 0.51Ω ±5%) [R153,R152] 抵抗
106	VS2SB1197//−1	AC	DJ		B	Transistor(2SB1197) [Q22,Q24,Q26] ﾄﾗﾝｼﾞｽﾀｰ
107	VSDTA114EUA−1	AC	DJ		B	Transistor(DTA114EUA) [Q16,Q21,Q28,Q29,Q37] ﾄﾗﾝｼﾞｽﾀｰ
108	VSDTC114YUA−1	AB	DJ		B	Transistor(DTC114YUA) [Q1,Q2,Q3,Q4,Q5,Q6,Q8,Q9] ﾄﾗﾝｼﾞｽﾀｰ
	VSDTC114YUA−1	AB	DJ		B	Transistor(DTC114YUA) [Q10,Q11,Q12,Q13,Q14,Q15] ﾄﾗﾝｼﾞｽﾀｰ
	VSDTC114YUA−1	AB	DJ		B	Transistor(DTC114YUA) [Q19,Q20,Q23,Q25,Q27,Q30] ﾄﾗﾝｼﾞｽﾀｰ
	VSDTC114YUA−1	AB	DJ		B	Transistor(DTC114YUA) [Q31,Q33,Q34,Q35,Q17] ﾄﾗﾝｼﾞｽﾀｰ
	(Unit)					
901	CPWBN1519DS52	CX	**	N	E	MFPC2 PWB UNIT MPFC2 基板ﾕﾆｯﾄ

53 ICU 基板 (ICU PWB)

NO.	PARTS CODE	PRICE RANK Ex.	PRICE RANK Ja.	NEW MARK	PART RANK	DESCRIPTION
1	PCAPH0010GCZZ	AD	DJ		C	Cap(JM-2W-96) [PIN1,PIN2] ｷｬｯﾌﾟ
2	PCOVP1468FCZZ	AD	DJ		D	FAX battery cover FAX ﾃﾞﾝﾁｶﾊﾞｰ
3	QCNCM0923FC14	AE	DJ		C	Connector(14pin) [CN10] ｺﾈｸﾀｰ
4	QCNCM0923FC22	AF	DS		C	Connector(22pin) [CN4,CN5,CN6,CN9] ｺﾈｸﾀｰ
5	QCNCM0923FC24	AF	DS		C	Connector(24pin) [CN13] ｺﾈｸﾀｰ
6	QCNCM1069AC1J	AD	DJ		C	Connector(10pin) [CN11] ｺﾈｸﾀｰ
7	QCNCM1187FCZZ	AM	EG	N	C	Connector(F_BM30B-SRDS-G-TF) (AR-C260F/C260FP) [CN12] ｺﾈｸﾀｰ
8	QCNCM7014SC0C	AA	DD		C	Connector(3pin) [CN20] ｺﾈｸﾀｰ
9	QCNCM7014SC0G	AB	DD		C	Connector(7pin) (Japan Only) [CN14] ｺﾈｸﾀｰ
10	QCNCW0948FCZ6	AC	DJ		C	Connector(B06B-XASK-1) [CN1,CN2,CN3,CN7] ｺﾈｸﾀｰ
11	QCNCW1047FCZZ	AH	DX		C	Connector(TSC7658-01-201) [CN18] ｺﾈｸﾀｰ
12	QCNCW1170FCZZ	AG	DS		C	Connector(28FMZ-BT) [CN16] ｺﾈｸﾀｰ
13	QCNCW1186FCZZ	AF	DS		C	Connector(TX25-100P-LT-H1) [CN17] ｺﾈｸﾀｰ
14	QPiN-0003GCZZ	AC	DJ		C	Pin(T3B-SQ) [PIN1,PIN2] ﾋﾟﾝ
15	QSOCZ0001QSZZ	AL	EB		C	Socket(DMM168-FLAA2-3A133) [DIMM2,DIMM1] ｿｹｯﾄ
16	QSOCZ0073FCZZ	AL	EB		C	Connector(72pin) [SOCKET2,SOCKET3] ｺﾈｸﾀｰ
	QSOCZ0073FCZZ	AL	EB		C	Connector(72pin) (AR-C260F/C260FP)[SOCKET1] ｺﾈｸﾀｰ
17	QSOCZ6428ACZZ	AE	DS		C	IC socket(28pin) [IC50] IC ｿｹｯﾄ
18	RCRSP0069FCZZ	AG	DS		B	Crystal(14.7456MHz)(AT-51) [X3] ｸﾘｽﾀﾙ
19	RCRSP0077FCZZ	AF	DS		B	Crystal(16.667MHz)(AT-51) [X5] ｸﾘｽﾀﾙ
20	RCRSP0079FCZZ	AF	DS		B	Crystal(12.352MHz)(AT-51) [X6] ｸﾘｽﾀﾙ
21	RCRSP6676RCZZ	AG	DX		B	Crystal(32.768KHz) [X9] ｸﾘｽﾀﾙ
22	RCRSQ0073FCZZ	AF	DS		B	Crystal(21.47727MHz)(AT-51) [X1] ｸﾘｽﾀﾙ
23	RFiLN5022NCZZ	AC	DJ		C	EMI filter(BLM11A12PT) [L1,L2,L5,L7,L9,L11,L13] EMI ﾌｨﾙﾀｰ
	RFiLN5022NCZZ	AC	DJ		C	EMI filter(BLM11A12PT) [L15,L16,L20,L22,L24,L26] EMI ﾌｨﾙﾀｰ
	RFiLN5022NCZZ	AC	DJ		C	EMI filter(BLM11A12PT) [L27,L29,L32,L35,L36,L37] EMI ﾌｨﾙﾀｰ
24	RFiLZ1043LCZZ	AC	DJ		C	Filter(33000pF) [NF2,NF3,NF4,NF5,NF6,NF8] ﾌｨﾙﾀｰ
	RFiLZ1043LCZZ	AC	DJ		C	Filter(33000pF) [NF9] ﾌｨﾙﾀｰ
25	RH-iX3103YAZZ	AG	DS		B	REGURATOR(L1087MPX_ADJ) [IC51,IC31] IC
26	RMEMM0001FCZZ	BZ	TF		B	SDRAM-Module-PWB(256MB-DIMM) [DIMM2] SDRAM-Module-PWB
27	RMPTW4100QCJJ	AA	DD		B	Block resistor(10Ω×4) [BR42,BR58,BR61,BR66] ﾌﾞﾛｯｸﾃｲｺｳ
28	RMPTW4101QCJJ	AB	DD		B	Block resistor(100Ω×4) [BR1,BR2,BR3,BR4,BR5,BR6] ﾌﾞﾛｯｸﾃｲｺｳ
	RMPTW4101QCJJ	AB	DD		B	Block resistor(100Ω×4) [BR26,BR40] ﾌﾞﾛｯｸﾃｲｺｳ
29	RMPTW4103QCJJ	AB	DD		B	Block resistor(10KΩ×4) [BR7,BR8,BR9,BR10,BR11] ﾌﾞﾛｯｸﾃｲｺｳ
	RMPTW4103QCJJ	AB	DD		B	Block resistor(10KΩ×4) [BR12,BR13,BR14,BR15,BR18] ﾌﾞﾛｯｸﾃｲｺｳ
	RMPTW4103QCJJ	AB	DD		B	Block resistor(10KΩ×4) [BR25,BR27,BR28,BR39,BR41] ﾌﾞﾛｯｸﾃｲｺｳ
	RMPTW4103QCJJ	AB	DD		B	Block resistor(10KΩ×4) [BR57,BR62,BR63,BR64,BR65] ﾌﾞﾛｯｸﾃｲｺｳ
	RMPTW4103QCJJ	AB	DD		B	Block resistor(10KΩ×4) [BR84,BR85,BR104,BR108] ﾌﾞﾛｯｸﾃｲｺｳ
	RMPTW4103QCJJ	AB	DD		B	Block resistor(10KΩ×4) [BR109,BR110,BR111,BR114] ﾌﾞﾛｯｸﾃｲｺｳ
	RMPTW4103QCJJ	AB	DD		B	Block resistor(10KΩ×4) [BR115,BR116,BR117,BR122] ﾌﾞﾛｯｸﾃｲｺｳ
	RMPTW4103QCJJ	AB	DD		B	Block resistor(10KΩ×4) [BR124,BR132,BR137,BR142] ﾌﾞﾛｯｸﾃｲｺｳ
	RMPTW4103QCJJ	AB	DD		B	Block resistor(10KΩ×4) [BR146,BR150,BR152,BR154] ﾌﾞﾛｯｸﾃｲｺｳ
	RMPTW4103QCJJ	AB	DD		B	Block resistor(10KΩ×4) [BR156,BR158,BR160,BR162] ﾌﾞﾛｯｸﾃｲｺｳ
	RMPTW4103QCJJ	AB	DD		B	Block resistor(10KΩ×4) [BR164,BR167,BR169,BR177] ﾌﾞﾛｯｸﾃｲｺｳ
	RMPTW4103QCJJ	AB	DD		B	Block resistor(10KΩ×4) [BR179,BR205,BR206] ﾌﾞﾛｯｸﾃｲｺｳ
30	RMPTW4470QCJJ	AB	DD		B	Block resistor(47Ω×4 1/32W ±5%) [BR19,BR20,BR21] ﾌﾞﾛｯｸﾃｲｺｳ
	RMPTW4470QCJJ	AB	DD		B	Block resistor(47Ω×4 1/32W ±5%) [BR22,BR23] ﾌﾞﾛｯｸﾃｲｺｳ
	RMPTW4470QCJJ	AB	DD		B	Block resistor(47Ω×4 1/32W ±5%) [BR24,BR37,BR38] ﾌﾞﾛｯｸﾃｲｺｳ
	RMPTW4470QCJJ	AB	DD		B	Block resistor(47Ω×4 1/32W ±5%) [BR43,BR44] ﾌﾞﾛｯｸﾃｲｺｳ
	RMPTW4470QCJJ	AB	DD		B	Block resistor(47Ω×4 1/32W ±5%) [BR45,BR46,BR47] ﾌﾞﾛｯｸﾃｲｺｳ
	RMPTW4470QCJJ	AB	DD		B	Block resistor(47Ω×4 1/32W ±5%) [BR48,BR49] ﾌﾞﾛｯｸﾃｲｺｳ
	RMPTW4470QCJJ	AB	DD		B	Block resistor(47Ω×4 1/32W ±5%) [BR50,BR51,BR52] ﾌﾞﾛｯｸﾃｲｺｳ
	RMPTW4470QCJJ	AB	DD		B	Block resistor(47Ω×4 1/32W ±5%) [BR55,BR56] ﾌﾞﾛｯｸﾃｲｺｳ
	RMPTW4470QCJJ	AB	DD		B	Block resistor(47Ω×4 1/32W ±5%) [BR59,BR60,BR67] ﾌﾞﾛｯｸﾃｲｺｳ
	RMPTW4470QCJJ	AB	DD		B	Block resistor(47Ω×4 1/32W ±5%) [BR69,BR71] ﾌﾞﾛｯｸﾃｲｺｳ
	RMPTW4470QCJJ	AB	DD		B	Block resistor(47Ω×4 1/32W ±5%) [BR73,BR75,BR77] ﾌﾞﾛｯｸﾃｲｺｳ
	RMPTW4470QCJJ	AB	DD		B	Block resistor(47Ω×4 1/32W ±5%) [BR78,BR81] ﾌﾞﾛｯｸﾃｲｺｳ
	RMPTW4470QCJJ	AB	DD		B	Block resistor(47Ω×4 1/32W ±5%) [BR82,BR86,BR87] ﾌﾞﾛｯｸﾃｲｺｳ
	RMPTW4470QCJJ	AB	DD		B	Block resistor(47Ω×4 1/32W ±5%) [BR88,BR89] ﾌﾞﾛｯｸﾃｲｺｳ
	RMPTW4470QCJJ	AB	DD		B	Block resistor(47Ω×4 1/32W ±5%) [BR91,BR97] ﾌﾞﾛｯｸﾃｲｺｳ
	RMPTW4470QCJJ	AB	DD		B	Block resistor(47Ω×4 1/32W ±5%) [BR98,BR99] ﾌﾞﾛｯｸﾃｲｺｳ
	RMPTW4470QCJJ	AB	DD		B	Block resistor(47Ω×4 1/32W ±5%) [BR100,BR105] ﾌﾞﾛｯｸﾃｲｺｳ
	RMPTW4470QCJJ	AB	DD		B	Block resistor(47Ω×4 1/32W ±5%) [BR106,BR107] ﾌﾞﾛｯｸﾃｲｺｳ
	RMPTW4470QCJJ	AB	DD		B	Block resistor(47Ω×4 1/32W ±5%) [BR118,BR125] ﾌﾞﾛｯｸﾃｲｺｳ
	RMPTW4470QCJJ	AB	DD		B	Block resistor(47Ω×4 1/32W ±5%) [BR126,BR127] ﾌﾞﾛｯｸﾃｲｺｳ
	RMPTW4470QCJJ	AB	DD		B	Block resistor(47Ω×4 1/32W ±5%) [BR128,BR129] ﾌﾞﾛｯｸﾃｲｺｳ
	RMPTW4470QCJJ	AB	DD		B	Block resistor(47Ω×4 1/32W ±5%) [BR130,BR131] ﾌﾞﾛｯｸﾃｲｺｳ
	RMPTW4470QCJJ	AB	DD		B	Block resistor(47Ω×4 1/32W ±5%) [BR133,BR136] ﾌﾞﾛｯｸﾃｲｺｳ
	RMPTW4470QCJJ	AB	DD		B	Block resistor(47Ω×4 1/32W ±5%) [BR138,BR141] ﾌﾞﾛｯｸﾃｲｺｳ
	RMPTW4470QCJJ	AB	DD		B	Block resistor(47Ω×4 1/32W ±5%) [BR143,BR145] ﾌﾞﾛｯｸﾃｲｺｳ
	RMPTW4470QCJJ	AB	DD		B	Block resistor(47Ω×4 1/32W ±5%) [BR147,BR149] ﾌﾞﾛｯｸﾃｲｺｳ
	RMPTW4470QCJJ	AB	DD		B	Block resistor(47Ω×4 1/32W ±5%) [BR151,BR153] ﾌﾞﾛｯｸﾃｲｺｳ
	RMPTW4470QCJJ	AB	DD		B	Block resistor(47Ω×4 1/32W ±5%) [BR155,BR157] ﾌﾞﾛｯｸﾃｲｺｳ
	RMPTW4470QCJJ	AB	DD		B	Block resistor(47Ω×4 1/32W ±5%) [BR159,BR161] ﾌﾞﾛｯｸﾃｲｺｳ
	RMPTW4470QCJJ	AB	DD		B	Block resistor(47Ω×4 1/32W ±5%) [BR163,BR165] ﾌﾞﾛｯｸﾃｲｺｳ
	RMPTW4470QCJJ	AB	DD		B	Block resistor(47Ω×4 1/32W ±5%) [BR170,BR171] ﾌﾞﾛｯｸﾃｲｺｳ
	RMPTW4470QCJJ	AB	DD		B	Block resistor(47Ω×4 1/32W ±5%) [BR172,BR173] ﾌﾞﾛｯｸﾃｲｺｳ
	RMPTW4470QCJJ	AB	DD		B	Block resistor(47Ω×4 1/32W ±5%) [BR174,BR175] ﾌﾞﾛｯｸﾃｲｺｳ
	RMPTW4470QCJJ	AB	DD		B	Block resistor(47Ω×4 1/32W ±5%) [BR176] ﾌﾞﾛｯｸﾃｲｺｳ

53 ICU 基板 (ICU PWB)

NO.	PARTS CODE	PRICE RANK Ex.	PRICE RANK Ja.	NEW MARK	PART RANK	DESCRIPTION
30	RMPTW4470QCJJ	AB	DD		B	Block resistor(47Ω×4 1/32W ±5%) [BR180,BR181] ﾌﾞﾛｯｸﾃｲｺｳ
	RMPTW4470QCJJ	AB	DD		B	Block resistor(47Ω×4 1/32W ±5%) [BR182,BR183] ﾌﾞﾛｯｸﾃｲｺｳ
	RMPTW4470QCJJ	AB	DD		B	Block resistor(47Ω×4 1/32W ±5%) [BR184,BR200] ﾌﾞﾛｯｸﾃｲｺｳ
	RMPTW4470QCJJ	AB	DD		B	Block resistor(47Ω×4 1/32W ±5%) [BR201,BR202,BR203] ﾌﾞﾛｯｸﾃｲｺｳ
⚠ 31	UBATi0014FCZZ	AN	EQ		B	Battery(CR2477-H01) (AR-C260F/C260FP)[BT1] ﾊﾞｯﾃﾘｰ
32	VCCCCZ1HH151J	AC	DD		C	Capacitor(150pF/50V)(GRM36CH151J50PT) [C64,C65,C66] ｺﾝﾃﾞﾝｻｰ
	VCCCCZ1HH151J	AC	DD		C	Capacitor(150pF/50V)(GRM36CH151J50PT) [C67,C103] ｺﾝﾃﾞﾝｻｰ
	VCCCCZ1HH151J	AC	DD		C	Capacitor(150pF/50V)(GRM36CH151J50PT) [C104,C118,C119] ｺﾝﾃﾞﾝｻｰ
33	VCCCCZ1HH220J	AA	DD		C	Capacitor(50WV 22pF) [C33,C34] ｺﾝﾃﾞﾝｻｰ
34	VCCCCZ1HH270J	AA	DD		C	Capacitor(27P 50V 1005) [C148,C150,C151] ｺﾝﾃﾞﾝｻｰ
	VCCCCZ1HH270J	AA	DD		C	Capacitor(27P 50V 1005) [C153] ｺﾝﾃﾞﾝｻｰ
	VCCCCZ1HH270J	AA	DD		C	Capacitor(27P 50V 1005) [C60,C62] ｺﾝﾃﾞﾝｻｰ
35	VCEAGA1AW107M	AB	DD		C	Capacitor(10WV 100μF) [C46,C81,C112,C117,C154] ｺﾝﾃﾞﾝｻｰ
	VCEAGA1AW107M	AB	DD		C	Capacitor(10WV 100μF) [C155,C182,C233,C241,C254] ｺﾝﾃﾞﾝｻｰ
	VCEAGA1AW107M	AB	DD		C	Capacitor(10WV 100μF) [C272,C273,C295,C316] ｺﾝﾃﾞﾝｻｰ
36	VCEAGA1AW476M	AA	DD		C	Capacitor(10WV 47μF) [C1,C6,C13,C30,C83,C94] ｺﾝﾃﾞﾝｻｰ
	VCEAGA1AW476M	AA	DD		C	Capacitor(10WV 47μF) [C218,C219] ｺﾝﾃﾞﾝｻｰ
	VCEAGA1AW476M	AA	DD		C	Capacitor(10WV 47μF) (AR-C260F/C260FP)[C361,C367] ｺﾝﾃﾞﾝｻｰ
	VCEAGA1AW476M	AA	DD		C	Capacitor(10WV 47μF) [C1025,C1035] ｺﾝﾃﾞﾝｻｰ
37	VCEAZA1AW477M	AC	DD		C	Capacitor(10WV 470μF) [C5,C8,C12,C56,C157,C177] ｺﾝﾃﾞﾝｻｰ
38	VCKYCY1EB104K	AG	DX		C	Capacitor(25WV 0.1μF(1608:B)) (Japan only) [C287,C288] ｺﾝﾃﾞﾝｻｰ
	VCKYCY1EB104K	AG	DX		C	Capacitor(25WV 0.1μF(1608:B)) (Japan only) [C292,C307,C308] ｺﾝﾃﾞﾝｻｰ
	VCKYCY1EB104K	AG	DX		C	Capacitor(25WV 0.1μF(1608:B)) [C53] ｺﾝﾃﾞﾝｻｰ
	VCKYCY1EB104K	AG	DX		C	Capacitor(25WV 0.1μF(1608:B)) (AR-C260F/C260FP) [C196,C197,C205] ｺﾝﾃﾞﾝｻｰ
	VCKYCY1EB104K	AG	DX		C	Capacitor(25WV 0.1μF(1608:B)) (AR-C260F/C260FP) [C217,C220] ｺﾝﾃﾞﾝｻｰ
	VCKYCY1EB104K	AG	DX		C	Capacitor(25WV 0.1μF(1608:B)) (AR-C260F/C260FP) [C225,C226,C229] ｺﾝﾃﾞﾝｻｰ
	VCKYCY1EB104K	AG	DX		C	Capacitor(25WV 0.1μF(1608:B)) (AR-C260F/C260FP) [C232,C244] ｺﾝﾃﾞﾝｻｰ
39	VCKYCZ1CF104Z	AB	DD		C	Capacitor(16WV 0.1μF) [C10,C11,C29,C37,C38,C40] ｺﾝﾃﾞﾝｻｰ
	VCKYCZ1CF104Z	AB	DD		C	Capacitor(16WV 0.1μF) [C41,C50,C57,C59,C61,C63] ｺﾝﾃﾞﾝｻｰ
	VCKYCZ1CF104Z	AB	DD		C	Capacitor(16WV 0.1μF) [C68,C70,C71,C72,C73,C74] ｺﾝﾃﾞﾝｻｰ
	VCKYCZ1CF104Z	AB	DD		C	Capacitor(16WV 0.1μF) [C75,C76,C77,C78,C80,C82] ｺﾝﾃﾞﾝｻｰ
	VCKYCZ1CF104Z	AB	DD		C	Capacitor(16WV 0.1μF) [C84,C89,C90,C91,C93,C96] ｺﾝﾃﾞﾝｻｰ
	VCKYCZ1CF104Z	AB	DD		C	Capacitor(16WV 0.1μF) [C99,C100,C101,C102,C105] ｺﾝﾃﾞﾝｻｰ
	VCKYCZ1CF104Z	AB	DD		C	Capacitor(16WV 0.1μF) [C106,C107,C108,C109,C113] ｺﾝﾃﾞﾝｻｰ
	VCKYCZ1CF104Z	AB	DD		C	Capacitor(16WV 0.1μF) [C114,C116,C120,C121,C122] ｺﾝﾃﾞﾝｻｰ
	VCKYCZ1CF104Z	AB	DD		C	Capacitor(16WV 0.1μF) [C124,C125,C128,C129,C130] ｺﾝﾃﾞﾝｻｰ
	VCKYCZ1CF104Z	AB	DD		C	Capacitor(16WV 0.1μF) [C131,C132,C133,C134,C136] ｺﾝﾃﾞﾝｻｰ
	VCKYCZ1CF104Z	AB	DD		C	Capacitor(16WV 0.1μF) [C137,C140,C141,C142,C143] ｺﾝﾃﾞﾝｻｰ
	VCKYCZ1CF104Z	AB	DD		C	Capacitor(16WV 0.1μF) [C144,C147,C149,C152,C156] ｺﾝﾃﾞﾝｻｰ
	VCKYCZ1CF104Z	AB	DD		C	Capacitor(16WV 0.1μF) [C158,C159,C160,C161,C162] ｺﾝﾃﾞﾝｻｰ
	VCKYCZ1CF104Z	AB	DD		C	Capacitor(16WV 0.1μF) [C163,C164,C167,C168,C169] ｺﾝﾃﾞﾝｻｰ
	VCKYCZ1CF104Z	AB	DD		C	Capacitor(16WV 0.1μF) [C171,C172,C173,C175,C176] ｺﾝﾃﾞﾝｻｰ
	VCKYCZ1CF104Z	AB	DD		C	Capacitor(16WV 0.1μF) [C178,C180,C181,C183,C184] ｺﾝﾃﾞﾝｻｰ
	VCKYCZ1CF104Z	AB	DD		C	Capacitor(16WV 0.1μF) [C188,C189,C190,C192,C193] ｺﾝﾃﾞﾝｻｰ
	VCKYCZ1CF104Z	AB	DD		C	Capacitor(16WV 0.1μF) [C194,C195,C198,C199,C200] ｺﾝﾃﾞﾝｻｰ
	VCKYCZ1CF104Z	AB	DD		C	Capacitor(16WV 0.1μF) [C201,C202,C206,C207,C208] ｺﾝﾃﾞﾝｻｰ
	VCKYCZ1CF104Z	AB	DD		C	Capacitor(16WV 0.1μF) [C209,C210,C211,C212,C213] ｺﾝﾃﾞﾝｻｰ
	VCKYCZ1CF104Z	AB	DD		C	Capacitor(16WV 0.1μF) [C214,C215,C222,C223,C234] ｺﾝﾃﾞﾝｻｰ
	VCKYCZ1CF104Z	AB	DD		C	Capacitor(16WV 0.1μF) [C235,C236,C237,C238,C239] ｺﾝﾃﾞﾝｻｰ
	VCKYCZ1CF104Z	AB	DD		C	Capacitor(16WV 0.1μF) [C240,C248,C251,C252,C253] ｺﾝﾃﾞﾝｻｰ
	VCKYCZ1CF104Z	AB	DD		C	Capacitor(16WV 0.1μF) [C257,C258,C259,C260,C261] ｺﾝﾃﾞﾝｻｰ
	VCKYCZ1CF104Z	AB	DD		C	Capacitor(16WV 0.1μF) [C262,C264,C265,C266,C267] ｺﾝﾃﾞﾝｻｰ
	VCKYCZ1CF104Z	AB	DD		C	Capacitor(16WV 0.1μF) [C268,C269,C270,C274,C275] ｺﾝﾃﾞﾝｻｰ
	VCKYCZ1CF104Z	AB	DD		C	Capacitor(16WV 0.1μF) [C276,C277,C278,C281,C282] ｺﾝﾃﾞﾝｻｰ
	VCKYCZ1CF104Z	AB	DD		C	Capacitor(16WV 0.1μF) [C284,C285,C286,C289,C290] ｺﾝﾃﾞﾝｻｰ
	VCKYCZ1CF104Z	AB	DD		C	Capacitor(16WV 0.1μF) [C291,C294,C296,C297,C298] ｺﾝﾃﾞﾝｻｰ
	VCKYCZ1CF104Z	AB	DD		C	Capacitor(16WV 0.1μF) [C299,C300,C301,C302,C303] ｺﾝﾃﾞﾝｻｰ
	VCKYCZ1CF104Z	AB	DD		C	Capacitor(16WV 0.1μF) [C304,C309,C310,C317,C318] ｺﾝﾃﾞﾝｻｰ
	VCKYCZ1CF104Z	AB	DD		C	Capacitor(16WV 0.1μF) [C319,C320,C323,C324,C325] ｺﾝﾃﾞﾝｻｰ
	VCKYCZ1CF104Z	AB	DD		C	Capacitor(16WV 0.1μF) [C329,C333,C334,C335,C336] ｺﾝﾃﾞﾝｻｰ
	VCKYCZ1CF104Z	AB	DD		C	Capacitor(16WV 0.1μF) [C344,C347,C348,C351] ｺﾝﾃﾞﾝｻｰ
	VCKYCZ1CF104Z	AB	DD		C	Capacitor(16WV 0.1μF) [C355,C356,C357,C364,C368] ｺﾝﾃﾞﾝｻｰ
	VCKYCZ1CF104Z	AB	DD		C	Capacitor(16WV 0.1μF) [C1022,C1026,C1027,C1028] ｺﾝﾃﾞﾝｻｰ
	VCKYCZ1CF104Z	AB	DD		C	Capacitor(16WV 0.1μF) [C1029,C1030,C1031,C1032] ｺﾝﾃﾞﾝｻｰ
	VCKYCZ1CF104Z	AB	DD		C	Capacitor(16WV 0.1μF) [C1033,C1034,C1047,C1050] ｺﾝﾃﾞﾝｻｰ
	VCKYCZ1CF104Z	AB	DD		C	Capacitor(16WV 0.1μF) [C1051,C1052,C1053] ｺﾝﾃﾞﾝｻｰ
	VCKYCZ1CF104Z	AB	DD		C	Capacitor(16WV 0.1μF) (AR-C260F/C260FP) [C92,C135,C165] ｺﾝﾃﾞﾝｻｰ
	VCKYCZ1CF104Z	AB	DD		C	Capacitor(16WV 0.1μF) (AR-C260F/C260FP)[C216,C224] ｺﾝﾃﾞﾝｻｰ
	VCKYCZ1CF104Z	AB	DD		C	Capacitor(16WV 0.1μF) (AR-C260F/C260FP) [C250,C279,C280] ｺﾝﾃﾞﾝｻｰ
40	VCKYCZ1EB103K	AB	DD		C	Capacitor(0.01μF 25V 1005) [C15,C19,C23,C98] ｺﾝﾃﾞﾝｻｰ
41	VCKYCZ1HB102K	AA	DD		C	Capacitor(50WV 1000pF) [C17,C21,C25,C36,C79,C110] ｺﾝﾃﾞﾝｻｰ

53 ICU 基板 (ICU PWB)

NO.	PARTS CODE	PRICE RANK Ex.	PRICE RANK Ja.	NEW MARK	PART RANK	DESCRIPTION
41	VCKYCZ1HB102K	AA	DD		C	Capacitor(50WV 1000pF) [C174,C293,C312,C313,C322] ｺﾝﾃﾞﾝｻｰ
	VCKYCZ1HB102K	AA	DD		C	Capacitor(50WV 1000pF) [C327,C332,C337,C338,C339] ｺﾝﾃﾞﾝｻｰ
	VCKYCZ1HB102K	AA	DD		C	Capacitor(50WV 1000pF) [C352,C353,C354,C358,C359] ｺﾝﾃﾞﾝｻｰ
	VCKYCZ1HB102K	AA	DD		C	Capacitor(50WV 1000pF) [C360,C365,C1024,C1036] ｺﾝﾃﾞﾝｻｰ
	VCKYCZ1HB102K	AA	DD		C	Capacitor(50WV 1000pF) [C1037,C1056] ｺﾝﾃﾞﾝｻｰ
	VCKYCZ1HB102K	AA	DD		C	Capacitor(50WV 1000pF) (AR-C260F/C260FP) [C203,C230] ｺﾝﾃﾞﾝｻｰ
	VCKYCZ1HB102K	AA	DD		C	Capacitor(50WV 1000pF) (AR-C260F/C260FP)[C231] ｺﾝﾃﾞﾝｻｰ
42	VCKYCZ1HB471K	AA	DD		C	Capacitor(50WV 470pF) [C14,C18,C22,C95,C314] ｺﾝﾃﾞﾝｻｰ
	VCKYCZ1HB471K	AA	DD		C	Capacitor(50WV 470pF) [C315] ｺﾝﾃﾞﾝｻｰ
43	VHD1SS355//-1	AB	DJ		B	Diode(1SS355) [D100,D101] ﾀﾞｲｵｰﾄﾞ
	VHD1SS355//-1	AB	DJ		B	Diode(1SS355) (AR-C260F/C260FP)[D37,D40] ﾀﾞｲｵｰﾄﾞ
44	VHDDAN202U/-1	AB	DD		B	Diode(DAN202U) [D9,D12,D16,D17,D18,D28] ﾀﾞｲｵｰﾄﾞ
	VHDDAN202U/-1	AB	DD		B	Diode(DAN202U) [D29,D30,D31,D32,D33,D34] ﾀﾞｲｵｰﾄﾞ
	VHDDAN202U/-1	AB	DD		B	Diode(DAN202U) [D35,D36,D41,D42,D43,D45] ﾀﾞｲｵｰﾄﾞ
	VHDDAN202U/-1	AB	DD		B	Diode(DAN202U) (AR-C260F/C260FP)[D4] ﾀﾞｲｵｰﾄﾞ
45	VHDDAP202U/-1	AB	DD		B	Diode(DAP202U) [D8,D11,D13,D14,D15,D19] ﾀﾞｲｵｰﾄﾞ
	VHDDAP202U/-1	AB	DD		B	Diode(DAP202U) [D20,D21,D22,D23,D24,D25] ﾀﾞｲｵｰﾄﾞ
	VHDDAP202U/-1	AB	DD		B	Diode(DAP202U) [D26,D27,D38,D39,D44,D46] ﾀﾞｲｵｰﾄﾞ
	VHDDAP202U/-1	AB	DD		B	Diode(DAP202U) (AR-C260F/C260FP)[D2,D5] ﾀﾞｲｵｰﾄﾞ
46	VHDRB451F//-1	AD	DS		B	Diode(RB451F) (AR-C260F/C260FP)[D3] ﾀﾞｲｵｰﾄﾞ
47	VHi23S09SC+-1	AV	FG		B	ZDBUFFER(CY23S09SC-1) [IC34] IC
48	VHi58C256AP-1	BB	GD		B	EEPROM(HN58V256AP-10) [IC50] EEPROM
50	VHi65949P03-1	BE	GN		B	ASIC(uPD65949GD-P03-LML)(IOASIC) [IC56] IC
51	VHi74LCX14MTC	AE	DJ		B	IC(74LCX14MTC) [IC21,IC23,IC29,IC66,IC67] IC
	VHi74LCX14MTC	AE	DJ		B	IC(74LCX14MTC) [IC68] IC
	VHi74LCX14MTC	AE	DJ		B	IC(74LCX14MTC) (AR-C260F/C260FP)[IC43] IC
52	VHi74LCX244MT	AM	DX		B	IC(74LCX244MT) [IC2,IC3,IC4,IC7,IC8,IC13] IC
	VHi74LCX244MT	AM	DX		B	IC(74LCX244MT) [IC17,IC18,IC26,IC27,IC35] IC
	VHi74LCX244MT	AM	DX		B	IC(74LCX244MT) [IC53,IC69,IC72,IC73] IC
	VHi74LCX244MT	AM	DX		B	IC(74LCX244MT) [IC74,IC75,IC76,IC102] IC
	VHi74LCX244MT	AM	DX		B	IC(74LCX244MT) [IC103,IC104,IC105,IC106] IC
	VHi74LCX244MT	AM	DX		B	IC(74LCX244MT) [IC107,IC108] IC
53	VHi74LCX245MT	AM	DX		B	IC(74LCX245MT) [IC57,IC58,IC59,IC60,IC61] IC
54	VHi85672011-1	BV	RB		B	ASIC(uPD85672S1-011-F6)(ICUASIC) [IC33] IC
55	VHi90CF364A-1	AU	FG		B	LVDSIC(DS90CF364AMTD) [IC32] IC
56	VHiCY25811S-1	AN	EG		B	SSIC(CY25811SC) [IC12] IC
58	VHiCY25814S-1	AN	EG		B	SSIC(CY25814SC) [IC39,IC37] IC
59	VHiHi207ECB-1	AN	EQ		B	RS232CDRIVER(HIN207ECB) (Japan only) [IC52] IC
60	VHiLCX574MT-1	AF	DS		B	LOGIC(74LCX574) [IC28] IC
61	VHiLCX74MTC-1	AE	DJ		B	LOGIC(74LCX74) [IC1] IC
62	VHiLHF80J01-1	AX	FG		B	FLASH ROM(F_LH28F800BJE-PTTL90) (AR-C260F/C260FP) [IC30,IC42] FLASH ROM
63	VHiLM393D++-1	AE	DJ		B	COMPARATOR(LM393D [IC78] IC
64	VHiM3032ATC-1	AT	EZ	N	B	CPLD(EPM3032ATC44-10) [IC109] IC
65	VHiM51957BFP1	AH	DX		B	IC(M51957BFP1) [IC22] IC
66	VHiMAX3225E-1	AT	EZ		B	IC(MAX3225E) (AR-C260F/C260FP)[IC45,IC44] IC
67	VHiNJU6356E-1	AK	DX		B	IC(NJU6356E) [IC63] IC
68	VHiPM2500++-1	BP	LP		B	ASIC(PM-2500) [IC48] IC
69	VHiSD8M16L1-1	BB	GD		B	SDRAM(128x16SDRAM) [IC55] SDRAM
70	VHiSH770910-1	BH	GX		B	IC(SH770910) [IC54] IC
71	VHiSR1024-7LL	AU	EZ		B	SRAM(F_UT62L1024LC-70LL) (AR-C260F/C260FP) [IC65,IC64] SRAM
72	VHPLT1F67AF-1	AC	DJ		B	LED(LT1F67AF) [SLED1,SLED2] LED
	VHPLT1F67AF-1	AC	DJ		B	LED(LT1F67AF) [SLED3] LED
73	VRS-CZ1JD000J	AA	DD		C	Resistor(1/16W 0Ω ±5%) [R3,R6,R9,R13,R37,R40,R64] 抵抗
	VRS-CZ1JD000J	AA	DD		C	Resistor(1/16W 0Ω ±5%) [R85,R104,R105,R118,R155] 抵抗
	VRS-CZ1JD000J	AA	DD		C	Resistor(1/16W 0Ω ±5%) [R156,R162,R163,R175,R178] 抵抗
	VRS-CZ1JD000J	AA	DD		C	Resistor(1/16W 0Ω ±5%) [R188,R192,R246,R272,R306] 抵抗
	VRS-CZ1JD000J	AA	DD		C	Resistor(1/16W 0Ω ±5%) [R307,R308,R309,R311,R312] 抵抗
	VRS-CZ1JD000J	AA	DD		C	Resistor(1/16W 0Ω ±5%) [R317,R318,R321,R330,R331] 抵抗
	VRS-CZ1JD000J	AA	DD		C	Resistor(1/16W 0Ω ±5%) [R343,R344,R353,R356,R357] 抵抗
	VRS-CZ1JD000J	AA	DD		C	Resistor(1/16W 0Ω ±5%) [R367,R371,R384,R420,R424] 抵抗
	VRS-CZ1JD000J	AA	DD		C	Resistor(1/16W 0Ω ±5%) [R457,R458,R460,R461,R478] 抵抗
	VRS-CZ1JD000J	AA	DD		C	Resistor(1/16W 0Ω ±5%) [R557,R558,R571,R602,R678] 抵抗
	VRS-CZ1JD000J	AA	DD		C	Resistor(1/16W 0Ω ±5%) [R687,R704,R902,R903] 抵抗
	VRS-CZ1JD000J	AA	DD		C	Resistor(1/16W 0Ω ±5%) [R905,R907,R1016] 抵抗
	VRS-CZ1JD000J	AA	DD		C	Resistor(1/16W 0Ω ±5%) [R1022,R1040,R1051,R1062] 抵抗
	VRS-CZ1JD000J	AA	DD		C	Resistor(1/16W 0Ω ±5%) [R1085,R1092,R1096,R1098] 抵抗
	VRS-CZ1JD000J	AA	DD		C	Resistor(1/16W 0Ω ±5%) [R1100,R1102,R1104,R1111] 抵抗
	VRS-CZ1JD000J	AA	DD		C	Resistor(1/16W 0Ω ±5%) (AR-C260F/C260FP) [R191,R423,R431] 抵抗
	VRS-CZ1JD000J	AA	DD		C	Resistor(1/16W 0Ω ±5%) (AR-C260F/C260FP) [R432,R436] 抵抗
	VRS-CZ1JD000J	AA	DD		C	Resistor(1/16W 0Ω ±5%) (AR-C260F/C260FP) [R437,R449,R450] 抵抗
	VRS-CZ1JD000J	AA	DD		C	Resistor(1/16W 0Ω ±5%) (AR-C260F/C260FP) [R462,R463] 抵抗

53 ICU 基板 (ICU PWB)

NO.	PARTS CODE	PRICE RANK Ex.	PRICE RANK Ja.	NEW MARK	PART RANK	DESCRIPTION
73	VRS-CZ1JD000J	AA	DD		C	Resistor(1/16W 0Ω ±5%) (AR-C260F/C260FP) [R488,R489,R523] 抵抗
	VRS-CZ1JD000J	AA	DD		C	Resistor(1/16W 0Ω ±5%) (AR-C260F/C260FP) [R790,R1010] 抵抗
	VRS-CZ1JD000J	AA	DD		C	Resistor(1/16W 0Ω ±5%) [R2,R5,R8,R221] 抵抗
	VRS-CZ1JD000J	AA	DD		C	Resistor(1/16W 0Ω ±5%) (Except Japan) [R1083] 抵抗
74	VRS-CZ1JD100J	AA	DD		C	Resistor(1/16W 10Ω ±5%) [R136,R137,R149,R150,R227] 抵抗
	VRS-CZ1JD100J	AA	DD		C	Resistor(1/16W 10Ω ±5%) [R228,R253,R257,R258,R287] 抵抗
	VRS-CZ1JD100J	AA	DD		C	Resistor(1/16W 10Ω ±5%) [R288,R293,R296,R301,R316] 抵抗
	VRS-CZ1JD100J	AA	DD		C	Resistor(1/16W 10Ω ±5%) [R375,R440,R441,R447] 抵抗
75	VRS-CZ1JD101J	AA	DD		C	Resistor(1/16W 100Ω ±5%) [R10,R12,R32,R34,R38,R41] 抵抗
	VRS-CZ1JD101J	AA	DD		C	Resistor(1/16W 100Ω ±5%) [R42,R43,R44,R45,R68,R70] 抵抗
	VRS-CZ1JD101J	AA	DD		C	Resistor(1/16W 100Ω ±5%) [R97,R108,R110,R119,R120] 抵抗
	VRS-CZ1JD101J	AA	DD		C	Resistor(1/16W 100Ω ±5%) [R121,R122,R132,R176,R213] 抵抗
	VRS-CZ1JD101J	AA	DD		C	Resistor(1/16W 100Ω ±5%) [R214,R215,R216,R220,R222] 抵抗
	VRS-CZ1JD101J	AA	DD		C	Resistor(1/16W 100Ω ±5%) [R266,R267,R268,R271,R276] 抵抗
	VRS-CZ1JD101J	AA	DD		C	Resistor(1/16W 100Ω ±5%) [R279,R313,R319,R320,R332] 抵抗
	VRS-CZ1JD101J	AA	DD		C	Resistor(1/16W 100Ω ±5%) [R334,R349,R364,R368,R388] 抵抗
	VRS-CZ1JD101J	AA	DD		C	Resistor(1/16W 100Ω ±5%) [R389,R390,R391,R392,R393] 抵抗
	VRS-CZ1JD101J	AA	DD		C	Resistor(1/16W 100Ω ±5%) [R1012,R1013,R1015] 抵抗
	VRS-CZ1JD101J	AA	DD		C	Resistor(1/16W 100Ω ±5%) [R1052,R1053,R1077,R1078] 抵抗
	VRS-CZ1JD101J	AA	DD		C	Resistor(1/16W 100Ω ±5%) [R1081] 抵抗
76	VRS-CZ1JD102J	AA	DD		C	Resistor(1/16W 1KΩ ±5%) [R145,R166] 抵抗
	VRS-CZ1JD102J	AA	DD		C	Resistor(1/16W 1KΩ ±5%) [R232,R247,R295,R335] 抵抗
	VRS-CZ1JD102J	AA	DD		C	Resistor(1/16W 1KΩ ±5%) [R339,R348,R528,R595,R611] 抵抗
	VRS-CZ1JD102J	AA	DD		C	Resistor(1/16W 1KΩ ±5%) [R618,R643,R644,R648,R649] 抵抗
	VRS-CZ1JD102J	AA	DD		C	Resistor(1/16W 1KΩ ±5%) [R676,R684,R685,R686,R689] 抵抗
	VRS-CZ1JD102J	AA	DD		C	Resistor(1/16W 1KΩ ±5%) [R690,R708,R726,R727,R730] 抵抗
	VRS-CZ1JD102J	AA	DD		C	Resistor(1/16W 1KΩ ±5%) [R731,R732,R742,R744,R752] 抵抗
	VRS-CZ1JD102J	AA	DD		C	Resistor(1/16W 1KΩ ±5%) [R753,R754,R755,R756,R758] 抵抗
	VRS-CZ1JD102J	AA	DD		C	Resistor(1/16W 1KΩ ±5%) [R759,R760,R767,R768] 抵抗
	VRS-CZ1JD102J	AA	DD		C	Resistor(1/16W 1KΩ ±5%) [R802,R803,R804,R1005] 抵抗
	VRS-CZ1JD102J	AA	DD		C	Resistor(1/16W 1KΩ ±5%) [R1006,R1008,R1023] 抵抗
	VRS-CZ1JD102J	AA	DD		C	Resistor(1/16W 1KΩ ±5%) [R1028,R1029,R1030,R1031] 抵抗
	VRS-CZ1JD102J	AA	DD		C	Resistor(1/16W 1KΩ ±5%) [R1036,R1074,R1082,R1109] 抵抗
	VRS-CZ1JD102J	AA	DD		C	Resistor(1/16W 1KΩ ±5%) [R1115,R1116,R1117,R1121] 抵抗
	VRS-CZ1JD102J	AA	DD		C	Resistor(1/16W 1KΩ ±5%) [R124] 抵抗
	VRS-CZ1JD102J	AA	DD		C	Resistor(1/16W 1KΩ ±5%) (AR-C260F/C260FP) [R421,R471,R472] 抵抗
	VRS-CZ1JD102J	AA	DD		C	Resistor(1/16W 1KΩ ±5%) (AR-C260F/C260FP) [R795,R1009] 抵抗
77	VRS-CZ1JD103J	AA	DD		C	Resistor(1/16W 10KΩ ±5%) [R11,R28,R29,R33,R35,R46] 抵抗
	VRS-CZ1JD103J	AA	DD		C	Resistor(1/16W 10KΩ ±5%) [R116,R168,R169,R170,R172] 抵抗
	VRS-CZ1JD103J	AA	DD		C	Resistor(1/16W 10KΩ ±5%) [R174,R180,R233,R235,R238] 抵抗
	VRS-CZ1JD103J	AA	DD		C	Resistor(1/16W 10KΩ ±5%) [R241,R265,R280,R286,R290] 抵抗
	VRS-CZ1JD103J	AA	DD		C	Resistor(1/16W 10KΩ ±5%) [R291,R303,R314,R333,R350] 抵抗
	VRS-CZ1JD103J	AA	DD		C	Resistor(1/16W 10KΩ ±5%) [R362,R363,R373,R387,R394] 抵抗
	VRS-CZ1JD103J	AA	DD		C	Resistor(1/16W 10KΩ ±5%) [R415,R419,R428,R434,R435] 抵抗
	VRS-CZ1JD103J	AA	DD		C	Resistor(1/16W 10KΩ ±5%) [R442,R446,R448,R456,R468] 抵抗
	VRS-CZ1JD103J	AA	DD		C	Resistor(1/16W 10KΩ ±5%) [R474,R475,R476,R477,R480] 抵抗
	VRS-CZ1JD103J	AA	DD		C	Resistor(1/16W 10KΩ ±5%) [R481,R482,R483,R496,R497] 抵抗
	VRS-CZ1JD103J	AA	DD		C	Resistor(1/16W 10KΩ ±5%) [R498,R499,R500,R501,R546] 抵抗
	VRS-CZ1JD103J	AA	DD		C	Resistor(1/16W 10KΩ ±5%) [R567,R568,R579,R580,R586] 抵抗
	VRS-CZ1JD103J	AA	DD		C	Resistor(1/16W 10KΩ ±5%) [R587,R594,R614,R615,R616] 抵抗
	VRS-CZ1JD103J	AA	DD		C	Resistor(1/16W 10KΩ ±5%) [R617,R621,R622,R623,R624] 抵抗
	VRS-CZ1JD103J	AA	DD		C	Resistor(1/16W 10KΩ ±5%) [R627,R628,R629,R636,R637] 抵抗
	VRS-CZ1JD103J	AA	DD		C	Resistor(1/16W 10KΩ ±5%) [R638,R639,R645,R673,R679] 抵抗
	VRS-CZ1JD103J	AA	DD		C	Resistor(1/16W 10KΩ ±5%) [R680,R681,R688,R696] 抵抗
	VRS-CZ1JD103J	AA	DD		C	Resistor(1/16W 10KΩ ±5%) (AR-C260/C260S/C260M) [R703] 抵抗
	VRS-CZ1JD103J	AA	DD		C	Resistor(1/16W 10KΩ ±5%) (AR-C260F/C260FP)[R702] 抵抗
	VRS-CZ1JD103J	AA	DD		C	Resistor(1/16W 10KΩ ±5%) [R705,R706,R707,R710,R714] 抵抗
	VRS-CZ1JD103J	AA	DD		C	Resistor(1/16W 10KΩ ±5%) [R735,R736,R737,R738,R739] 抵抗
	VRS-CZ1JD103J	AA	DD		C	Resistor(1/16W 10KΩ ±5%) (AR-C260/C260S/C260M) [R740] 抵抗
	VRS-CZ1JD103J	AA	DD		C	Resistor(1/16W 10KΩ ±5%) (AR-C260F/C260FP) [R741,R1087] 抵抗
	VRS-CZ1JD103J	AA	DD		C	Resistor(1/16W 10KΩ ±5%) [R743,R745,R746,R747] 抵抗
	VRS-CZ1JD103J	AA	DD		C	Resistor(1/16W 10KΩ ±5%) [R748,R749,R750,R751,R785] 抵抗
	VRS-CZ1JD103J	AA	DD		C	Resistor(1/16W 10KΩ ±5%) [R796,R800,R801] 抵抗
	VRS-CZ1JD103J	AA	DD		C	Resistor(1/16W 10KΩ ±5%) [R1014,R1032,R1033,R1034] 抵抗
	VRS-CZ1JD103J	AA	DD		C	Resistor(1/16W 10KΩ ±5%) [R1035,R1037,R1055,R1056] 抵抗
	VRS-CZ1JD103J	AA	DD		C	Resistor(1/16W 10KΩ ±5%) [R1063,R1064,R1066,R1067] 抵抗
	VRS-CZ1JD103J	AA	DD		C	Resistor(1/16W 10KΩ ±5%) [R1068,R1069,R1070,R1071] 抵抗
	VRS-CZ1JD103J	AA	DD		C	Resistor(1/16W 10KΩ ±5%) [R1072,R1075,R1076] 抵抗
	VRS-CZ1JD103J	AA	DD		C	Resistor(1/16W 10KΩ ±5%) [R1089,R1112,R1113,R1114] 抵抗
	VRS-CZ1JD103J	AA	DD		C	Resistor(1/16W 10KΩ ±5%) [R1119] 抵抗
	VRS-CZ1JD103J	AA	DD		C	Resistor(1/16W 10KΩ ±5%) (AR-C260F/C260FP) [R422,R433,R438] 抵抗

53 ICU 基板 (ICU PWB)

NO.	PARTS CODE	PRICE RANK Ex.	PRICE RANK Ja.	NEW MARK	PART RANK	DESCRIPTION
77	VRS−CZ1JD103J	AA	DD		C	Resistor(1/16W 10KΩ ±5%) (AR-C260F/C260FP) [R466,R473] 抵抗
	VRS−CZ1JD103J	AA	DD		C	Resistor(1/16W 10KΩ ±5%) (AR-C260F/C260FP) [R484,R485,R494] 抵抗
	VRS−CZ1JD103J	AA	DD		C	Resistor(1/16W 10KΩ ±5%) (Except Japan) [R1073,R1079,R1080] 抵抗
78	VRS−CZ1JD105J	AA	DD		C	Resistor(1/16W 1.0MΩ ±5%) [R79,R125,R336] 抵抗
	VRS−CZ1JD105J	AA	DD		C	Resistor(1/16W 1.0MΩ ±5%) [R340,R1054] 抵抗
79	VRS−CZ1JD121J	AA	DD		C	Resistor(1/16W 120Ω ±5%) [R325,R326,R590] 抵抗
80	VRS−CZ1JD151J	AA	DD		C	Resistor(1/16W 150Ω ±5%) [R694] 抵抗
81	VRS−CZ1JD152J	AA	DD		C	Resistor(1/16W 1.5KΩ ±5%) [R83,R560] 抵抗
	VRS−CZ1JD152J	AA	DD		C	Resistor(1/16W 1.5KΩ ±5%) [R563,R574,R575,R786] 抵抗
82	VRS−CZ1JD182J	AA	DD		C	Resistor(1/16W 1.8KΩ ±5%) [R77] 抵抗
83	VRS−CZ1JD202J	AA	DD		C	Resistor(1/16W 2.0KΩ ±5%) [R682] 抵抗
84	VRS−CZ1JD271J	AA	DD		C	Resistor(1/16W 270Ω ±5%) [R591] 抵抗
	VRS−CZ1JD271J	AA	DD		C	Resistor(1/16W 270JΩ ±5%) [R78] 抵抗
85	VRS−CZ1JD272J	AA	DD		C	Resistor(1/16W 2.7KΩ ±5%) [R82] 抵抗
86	VRS−CZ1JD333J	AA	DD		C	Resistor(1/16W 33KΩ ±5%) (AR-C260F/C260FP)[R791] 抵抗
87	VRS−CZ1JD470J	AA	DD		C	Resistor(1/16W 47Ω ±5%) [R54,R55,R56,R59,R60,R61] 抵抗
	VRS−CZ1JD470J	AA	DD		C	Resistor(1/16W 47Ω ±5%) [R73,R74,R75,R128,R129] 抵抗
	VRS−CZ1JD470J	AA	DD		C	Resistor(1/16W 47Ω ±5%) [R130,R131,R159,R160,R161] 抵抗
	VRS−CZ1JD470J	AA	DD		C	Resistor(1/16W 47Ω ±5%) [R181,R182,R183,R195,R197] 抵抗
	VRS−CZ1JD470J	AA	DD		C	Resistor(1/16W 47Ω ±5%) [R199,R200,R201,R203,R204] 抵抗
	VRS−CZ1JD470J	AA	DD		C	Resistor(1/16W 47Ω ±5%) [R217,R218,R219,R223,R239] 抵抗
	VRS−CZ1JD470J	AA	DD		C	Resistor(1/16W 47Ω ±5%) [R242,R248,R262,R263,R264] 抵抗
	VRS−CZ1JD470J	AA	DD		C	Resistor(1/16W 47Ω ±5%) [R270,R275,R277,R278,R304] 抵抗
	VRS−CZ1JD470J	AA	DD		C	Resistor(1/16W 47Ω ±5%) [R310,R328,R346,R360,R361] 抵抗
	VRS−CZ1JD470J	AA	DD		C	Resistor(1/16W 47Ω ±5%) [R372,R379,R383,R385,R395] 抵抗
	VRS−CZ1JD470J	AA	DD		C	Resistor(1/16W 47Ω ±5%) [R396,R397,R398,R399,R406] 抵抗
	VRS−CZ1JD470J	AA	DD		C	Resistor(1/16W 47Ω ±5%) [R416,R418,R429,R443,R444] 抵抗
	VRS−CZ1JD470J	AA	DD		C	Resistor(1/16W 47Ω ±5%) [R445,R469,R503,R504,R505] 抵抗
	VRS−CZ1JD470J	AA	DD		C	Resistor(1/16W 47Ω ±5%) [R506,R507,R508,R509,R510] 抵抗
	VRS−CZ1JD470J	AA	DD		C	Resistor(1/16W 47Ω ±5%) [R511,R512,R513,R518,R519] 抵抗
	VRS−CZ1JD470J	AA	DD		C	Resistor(1/16W 47Ω ±5%) [R520,R521,R537,R538,R539] 抵抗
	VRS−CZ1JD470J	AA	DD		C	Resistor(1/16W 47Ω ±5%) [R540,R541,R542,R543,R544] 抵抗
	VRS−CZ1JD470J	AA	DD		C	Resistor(1/16W 47Ω ±5%) [R545,R547,R548,R549,R550] 抵抗
	VRS−CZ1JD470J	AA	DD		C	Resistor(1/16W 47Ω ±5%) [R551,R552,R553,R554,R565] 抵抗
	VRS−CZ1JD470J	AA	DD		C	Resistor(1/16W 47Ω ±5%) [R566,R569,R570,R577,R578] 抵抗
	VRS−CZ1JD470J	AA	DD		C	Resistor(1/16W 47Ω ±5%) [R581,R585,R593,R599,R600] 抵抗
	VRS−CZ1JD470J	AA	DD		C	Resistor(1/16W 47Ω ±5%) [R603,R606,R607,R608,R609] 抵抗
	VRS−CZ1JD470J	AA	DD		C	Resistor(1/16W 47Ω ±5%) [R612,R625,R631,R633,R634] 抵抗
	VRS−CZ1JD470J	AA	DD		C	Resistor(1/16W 47Ω ±5%) [R641,R642,R650,R653,R654] 抵抗
	VRS−CZ1JD470J	AA	DD		C	Resistor(1/16W 47Ω ±5%) [R655,R656,R657,R659,R660] 抵抗
	VRS−CZ1JD470J	AA	DD		C	Resistor(1/16W 47Ω ±5%) [R661,R662,R667,R668,R669] 抵抗
	VRS−CZ1JD470J	AA	DD		C	Resistor(1/16W 47Ω ±5%) [R670,R671,R674,R691,R692] 抵抗
	VRS−CZ1JD470J	AA	DD		C	Resistor(1/16W 47Ω ±5%) [R693,R695,R709,R711,R712] 抵抗
	VRS−CZ1JD470J	AA	DD		C	Resistor(1/16W 47Ω ±5%) [R713,R715,R716,R717,R718] 抵抗
	VRS−CZ1JD470J	AA	DD		C	Resistor(1/16W 47Ω ±5%) [R719,R720,R721,R722,R723] 抵抗
	VRS−CZ1JD470J	AA	DD		C	Resistor(1/16W 47Ω ±5%) [R724,R725,R728,R729,R733] 抵抗
	VRS−CZ1JD470J	AA	DD		C	Resistor(1/16W 47Ω ±5%) [R765,R772,R773,R774,R775] 抵抗
	VRS−CZ1JD470J	AA	DD		C	Resistor(1/16W 47Ω ±5%) [R776,R778,R780,R781,R782] 抵抗
	VRS−CZ1JD470J	AA	DD		C	Resistor(1/16W 47Ω ±5%) [R783,R784,R1018,R1019] 抵抗
	VRS−CZ1JD470J	AA	DD		C	Resistor(1/16W 47Ω ±5%) [R1020,R1021,R1038,R1039] 抵抗
	VRS−CZ1JD470J	AA	DD		C	Resistor(1/16W 47Ω ±5%) [R1057,R1058,R1059,R1060] 抵抗
	VRS−CZ1JD470J	AA	DD		C	Resistor(1/16W 47Ω ±5%) [R1065,R1090,R1091,R1093] 抵抗
	VRS−CZ1JD470J	AA	DD		C	Resistor(1/16W 47Ω ±5%) [R1094,R1106,R1108] 抵抗
	VRS−CZ1JD470J	AA	DD		C	Resistor(1/16W 47Ω ±5%) (AR-C260F/C260FP) [R514,R515,R516] 抵抗
	VRS−CZ1JD470J	AA	DD		C	Resistor(1/16W 47Ω ±5%) (AR-C260F/C260FP) [R517,R588] 抵抗
	VRS−CZ1JD470J	AA	DD		C	Resistor(1/16W 47Ω ±5%) (AR-C260F/C260FP) [R596,R597,R604] 抵抗
	VRS−CZ1JD470J	AA	DD		C	Resistor(1/16W 47Ω ±5%) (AR-C260F/C260FP) [R658,R663] 抵抗
	VRS−CZ1JD470J	AA	DD		C	Resistor(1/16W 47Ω ±5%) (AR-C260F/C260FP) [R664,R665,R666] 抵抗
	VRS−CZ1JD470J	AA	DD		C	Resistor(1/16W 47Ω ±5%) [R404] 抵抗
88	VRS−CZ1JD471J	AA	DD		C	Resistor(1/16W 470Ω ±5%) [R797] 抵抗
	VRS−CZ1JD471J	AA	DD		C	Resistor(1/16W 470Ω ±5%) [R798,R799] 抵抗
89	VRS−CZ1JD472J	AA	DD		C	Resistor(1/16W 4.7KΩ ±5%) [R788] 抵抗
90	VRS−CZ1JD473J	AA	DD		C	Resistor(1/16W 47KΩ ±5%) [R1084] 抵抗
91	VRS−CZ1JD680J	AA	DD		C	Resistor(1/16W 68JΩ ±5%) [R133,R140,R146,R153,R224] 抵抗
	VRS−CZ1JD680J	AA	DD		C	Resistor(1/16W 68JΩ ±5%) [R231,R254,R261] 抵抗
92	VS2SB1198K/−1	AC	DJ		B	Transistor(2SB1198K) (AR-C260F/C260FP)[Q35] ﾄﾗﾝｼﾞｽﾀｰ
93	VS2SC2412K/−1	AB	DD		B	Transistor(2SC2412K) (AR-C260F/C260FP)[Q36] ﾄﾗﾝｼﾞｽﾀｰ
94	VS2SJ243///−1	AD	DJ		B	Transistor(2SJ243) [FET2] ﾄﾗﾝｼﾞｽﾀｰ
	VS2SJ243///−1	AD	DJ		B	Transistor(2SJ243) (AR-C260F/C260FP)[FET4] ﾄﾗﾝｼﾞｽﾀｰ
95	VSDTC114YUA−1	AB	DJ		B	Transistor(DTC114YUA) [Q6,Q8,Q9,Q10] ﾄﾗﾝｼﾞｽﾀｰ
	VSDTC114YUA−1	AB	DJ		B	Transistor(DTC114YUA) [Q11,Q12,Q13,Q14,Q15,Q16] ﾄﾗﾝｼﾞｽﾀｰ
	VSDTC114YUA−1	AB	DJ		B	Transistor(DTC114YUA) [Q18,Q20,Q22,Q23,Q24,Q25] ﾄﾗﾝｼﾞｽﾀｰ

53 ICU 基板 (ICU PWB)

NO.	PARTS CODE	PRICE RANK Ex.	PRICE RANK Ja.	NEW MARK	PART RANK	DESCRIPTION
95	VSDTC114YUA-1	AB	DJ		B	Transistor(DTC114YUA) [Q26,Q27,Q28,Q29,Q30,Q32] ﾄﾗﾝｼﾞｽﾀｰ
	VSDTC114YUA-1	AB	DJ		B	Transistor(DTC114YUA) [Q33,Q34,Q100,Q103,Q104] ﾄﾗﾝｼﾞｽﾀｰ
	VSDTC114YUA-1	AB	DJ		B	Transistor(DTC114YUA) [Q105,Q106,Q107,Q108,Q109] ﾄﾗﾝｼﾞｽﾀｰ
	VSDTC114YUA-1	AB	DJ		B	Transistor(DTC114YUA) [Q110] ﾄﾗﾝｼﾞｽﾀｰ
	VSDTC114YUA-1	AB	DJ		B	Transistor(DTC114YUA) (AR-C260F/C260FP)[Q7] ﾄﾗﾝｼﾞｽﾀｰ
96	QCNCM0923FC10	AE	DS		C	Connector(10Pin) (Except Japan) [CN19] ｺﾈｸﾀ
	(Unit)					(Unit)
901	CPWBN1549DS54	CU	VW	N	E	ICU PWB UNIT (AR-C260S/C260M)[Japan] ICU 基板
	CPWBN1549DS55	CV	VZ	N	E	ICU PWB UNIT (AR-C260F/C260FP)[Japan] ICU 基板
	CPWBN1549DS57	CU	VW	N	E	ICU PWB UNIT (AR-C260/C260M)[Except Japan] ICU 基板

54 操作キー基板 (OPE KEY PWB)

NO.	PARTS CODE	PRICE RANK Ex.	PRICE RANK Ja.	NEW MARK	PART RANK	DESCRIPTION
1	QCNCM1171FCZZ	AE	DS		C	Connector(B6B-PH-SM3-TB) [CN2] ｺﾈｸﾀ
3	QSW-P0005QSZZ	AC	DJ		B	Tact switch(B3F-6102) [SW1,SW2,SW3,SW4,SW5] ﾀｸﾄ ｽｲｯﾁ
	QSW-P0005QSZZ	AC	DJ		B	Tact switch(B3F-6102) [SW6,SW7,SW9,SW10,SW11] ﾀｸﾄ ｽｲｯﾁ
	QSW-P0005QSZZ	AC	DJ		B	Tact switch(B3F-6102) [SW12,SW17,SW18,SW19,SW20] ﾀｸﾄ ｽｲｯﾁ
	QSW-P0005QSZZ	AC	DJ		B	Tact switch(B3F-6102) [SW21] ﾀｸﾄ ｽｲｯﾁ
4	QSW-P0469FCZZ	AD	DS		B	Push switch(SKHWAC) [SW8,SW13,SW14,SW15,SW16] ﾌﾟｯｼｭｽｲｯﾁ
5	RALMB1002LCZZ	AE	DS		B	Alarm(PKM13EPY-4000-TF01) [BZ1] ｱﾗｰﾑ
6	VCEAJU1CW476M	AB	DD		C	Capacitor(16WV 47μF) [C1] ｺﾝﾃﾞﾝｻｰ
7	VCKYPU1EB223Z	AB	DD		C	Capacitor(25WV 0.022μF) [C2] ｺﾝﾃﾞﾝｻｰ
8	VHDDSS133//-1	AA	DD		B	Diode(1SS133) [D1,D2] ﾀﾞｲｵｰﾄﾞ
9	VHP1LHLE-002A	AC	DJ		B	LED(Green)(LTL-1LHLE-002A) [LED1,LED2,LED3] LED ﾐﾄﾞﾘ
	VHP1LHLE-002A	AC	DJ		B	LED(Green)(LTL-1LHLE-002A) [LED4,LED5] LED ﾐﾄﾞﾘ
	VHP1LHLE-002A	AC	DJ		B	LED(Green)(LTL-1LHLE-002A) [LED6,LED7,LED8] LED ﾐﾄﾞﾘ
10	VHPLT9400E/-1	AK	EB		B	LED(LT9400E) [LED9,LED10] LED
11	VRD-HT2EY102J	AA	DD		C	Resistor(1/4W 1.0KΩ ±5%) [R17] 抵抗
12	VRD-HT2EY111J	AA	DD		C	Resistor(1/4W 110Ω ±5%) [R3] 抵抗
13	VRD-HT2EY151J	AA	DD		C	Resistor(1/4W 150Ω ±5%) [R4,R6,R7,R8,R9] 抵抗
	VRD-HT2EY151J	AA	DD		C	Resistor(1/4W 150Ω ±5%) [R10,R11,R12,R13,R14] 抵抗
	VRD-HT2EY151J	AA	DD		C	Resistor(1/4W 150Ω ±5%) [R15,R16] 抵抗
14	VRD-HT2EY302J	AA	DD		C	Resistor(1/4W 3.0KΩ ±5%) [R5] 抵抗
15	VRD-HT2EY473J	AA	DD		C	Resistor(1/4W 47KΩ ±5%) [R18,R19,R20,R21,R22] 抵抗
16	VRD-HT2EY682J	AA	DD		C	Resistor(1/4W 6.8KΩ ±5%) [R2] 抵抗
17	VRD-HT2EY911J	AA	DD		C	Resistor(1/4W 910Ω ±5%) [R1] 抵抗
18	VS2SC1740SR-1	AB	DD		B	Transistor(2SC1740SR) [Q1] ﾄﾗﾝｼﾞｽﾀｰ
	(Unit)					
901	CPWBF1525FCE1	BD	GJ	N	E	OPE KEY PWB UNIT 操作ｷｰ基板ﾕﾆｯﾄ

55 ﾄﾞﾗｲﾊﾞｰ基板 (DRIVER PWB)

NO.	PARTS CODE	PRICE RANK Ex.	PRICE RANK Ja.	NEW MARK	PART RANK	DESCRIPTION
1	QCNCM0672FCZZ	AB	DD		C	Connector(2pin) [CN9] ｺﾈｸﾀｰ
2	QCNCM0923FC12	AE	DJ		C	Connector(12pin) [CN3] ｺﾈｸﾀｰ
3	QCNCM0923FC3D	AF	DS		C	Connector(B34B-PHDSS)(34pin) [CN2] ｺﾈｸﾀｰ
4	QCNCM0931FCZZ	AF	DS		C	Connector(20pin) [CN8] ｺﾈｸﾀｰ
5	QCNCM1069AC0H	AE	DJ		C	Connector(8pin) [CN6] ｺﾈｸﾀｰ
6	QCNCM1069AC1J	AD	DJ		C	Connector(10pin) [CN5] ｺﾈｸﾀｰ
7	QCNCM7014SC0F	AB	DD		C	Connector(6pin) [CN1,CN4] ｺﾈｸﾀｰ
8	QCNCW0864FCZZ	AG	DX		C	Connector(12pin) [CN7] ｺﾈｸﾀｰ
⚠ 9	QFS-D1327QCZZ	AE	DS		A	Fuse(1.25A 250V) [F1] ﾋｭｰｽﾞ
10	QFSHB0028FCZZ	AC	DJ		C	Fuse holder(TP00351-31) [F1] ﾋｭｰｽﾞﾎﾙﾀﾞ
11	RC-KZ1054CCN2	AB	DD		C	Capacitor(RPE132-906) [C7,C17,C23,C29,C32,C33] ｺﾝﾃﾞﾝｻｰ
12	RMPTW4103QCJJ	AB	DD		B	Block resistor(10KΩ×4) [BR3] ﾌﾞﾛｯｸﾃｲｺｳ
13	RMPTW4473QCJJ	AB	DD		B	Resistor arrey(47kΩ×4 ±5%) [BR1,BR2] ﾃｲｺｳｱﾚｲ
14	VCEAGA1AW476M	AA	DD		C	Capacitor(10WV 47μF) [C30] ｺﾝﾃﾞﾝｻｰ
15	VCEAGA1CW106M	AA	DD		C	Capacitor(16WV 10μF) [C5,C6,C16,C22,C28,C44] ｺﾝﾃﾞﾝｻｰ
16	VCEAGU1VW108M	AE	DX		C	Capacitor(35WV 1000μF) [C31] ｺﾝﾃﾞﾝｻｰ
17	VCEAZA1VW476M	AC	DD		C	Capacitor(35WV 47μF) [C1,C2] ｺﾝﾃﾞﾝｻｰ
18	VCKYCZ1HB102K	AA	DD		C	Capacitor(50WV 1000pF) [C8,C9,C10,C11,C12] ｺﾝﾃﾞﾝｻｰ
	VCKYCZ1HB102K	AA	DD		C	Capacitor(50WV 1000pF) [C13,C14,C15] ｺﾝﾃﾞﾝｻｰ
19	VCKYCZ1HB222K	AA	DD		C	Capacitor(50WV 2200pF) [C18,C19,C24,C25,C34,C35] ｺﾝﾃﾞﾝｻｰ
20	VCKYCZ1HB471K	AA	DD		C	Capacitor(50WV 470pF) [C20,C21,C26,C27,C36,C37] ｺﾝﾃﾞﾝｻｰ
21	VHDDSM1D1//-1	AB	DJ		B	Diode(DSM1D1) [D1,D3,D5,D8] ﾀﾞｲｵｰﾄﾞ
22	VHDDSS133//-1	AA	DD		B	Diode(1SS133) [D2,D4,D6,D7,D9] ﾀﾞｲｵｰﾄﾞ
23	VHDRA13++++-1	AD	DJ		B	Diode(RA13) [D10] ﾀﾞｲｵｰﾄﾞ
24	VHiSLA7024MT/	AS	EQ		B	IC(SLA7024MT) [IC4,IC5,IC6] IC
25	VHiSLA7031M-1	AQ	EQ		B	IC(SLA7031M) [IC2] IC
26	VHiVHCT244T-1	AK	DX		B	IC(74VHCT244MTC) [IC1,IC3] IC

55 ﾄﾞﾗｲﾊﾞｰ基板 (DRIVER PWB)

NO.	PARTS CODE	PRICE RANK Ex.	PRICE RANK Ja.	NEW MARK	PART RANK	DESCRIPTION
27	VRD−HT2EY242J	AA	DD		C	Resistor(1/4W 2.4KΩ ±5%) [R1,R3,R6,R40] 抵抗
28	VRD−HT2EY104J	AA	DD		C	Resistor(1/4W 100KΩ ±5%) [R5] 抵抗
29	VRD−HT2EY562J	AA	DD		C	Resistor(1/4W 5.6KΩ ±5%) [R2,R4] 抵抗
30	VRS−CZ1JD102J	AA	DD		C	Resistor(1/16W 1KΩ ±5%) [R7,R14,R23,R32] 抵抗
32	VRS−CZ1JD242J	AA	DD		C	Resistor(1/16W 2.4KΩ ±5%) [R16,R17,R25,R26,R34,R35] 抵抗
33	VRS−CZ1JD271J	AA	DD		C	Resistor(1/16W 270Ω ±5%) [R20,R29,R38] 抵抗
34	VRS−CZ1JD473J	AA	DD		C	Resistor(1/16W 47KΩ ±5%) [R12,R13,R21,R22,R30,R31] 抵抗
35	VRS−HT3DA1R0J	AB	DD		C	Resistor(1/16W 2W 1.0Ω ±5%) [R9,R10,R15,R18,R24] 抵抗
	VRS−HT3DA1R0J	AB	DD		C	Resistor(2W 1.0Ω ±5%) [R27,R33,R36] 抵抗
38	VRD−HT2EY473J	AA	DD		C	Resistor(1/4W 47KΩ ±5%) [R39] 抵抗
	(Unit)					
901	CPWBN1545FCE1	BQ	LP	N	E	DRIVER PWB ﾄﾞﾗｲﾊﾞｰ基板ﾕﾆｯﾄ

56 LVDS/INV 基板 (LVDS/INV PWB UNIT)

NO.	PARTS CODE	PRICE RANK Ex.	PRICE RANK Ja.	NEW MARK	PART RANK	DESCRIPTION
1	QCNCM0991FCZZ	AG	DX		C	Connector(30FMZ-BT) [CN1] ｺﾈｸﾀｰ
2	QCNCM1172FCZZ	AL	EB	N	C	Connector(S02(8.0)B-BHS-L) [CN3] ｺﾈｸﾀ
3	QCNCW1164FCZZ	AE	DJ	N	C	Connector(04FM-1.0BT) [CN2] ｺﾈｸﾀ
4	QCNCW1165FCZZ	AG	DX	N	C	Connector(20FLS-SM1-TB) [CN4] ｺﾈｸﾀ
⚠ 5	QFS−E1111QCZZ	AF	DS		A	Fuse(217.200(200mA/250V)) [F1] ﾋｭｰｽﾞ
6	QFSHB0028FCZZ	AC	DJ		C	Fuse holder(TP00351-31) ﾋｭｰｽﾞﾎﾙﾀﾞ
7	RCiLF0068FCZZ	AF	DS		C	Coil(C-15389) [L1] ｺｲﾙ
⚠ 8	RTRNZ0511FCZZ	AQ	EQ		B	Transformer(C-15099) [T1] ﾄﾗﾝｽ
9	VCFYJU2JA103K	AC	DD		C	Capacitor(630WV 0.010μF) [C3] ｺﾝﾃﾞﾝｻｰ
10	VCKYCZ1EF223Z	AA	DD		C	Capacitor(0.022μF/50V(1005)) [C1,C2] ｺﾝﾃﾞﾝｻｰ
11	VCKYCZ1HB471K	AA	DD		C	Capacitor(50WV 470pF) [C6] ｺﾝﾃﾞﾝｻｰ
12	VCKYPU3SD150K	AC	DD		C	Capacitor(15pF/3KV)(CC45SL3FD150KYAN) [C4] ｺﾝﾃﾞﾝｻｰ
13	VHH103AT−2/−1	AG	DS		B	Thermistor(103AT-2) [TH1] ｻｰﾐｽﾀｰ
15	VRD−RC2EY103J	AA	DD		C	Resistor(1/4W 10KΩ ±5%) [R9,R10] 抵抗
16	VRS−CZ1JD101J	AA	DD		C	Resistor(1/16W 100Ω ±5%) [R1~R8] 抵抗
17	VS2SD1857A+−1	AB	DJ		B	Transistor(2SD1857ATV2) [Q1,Q2] ﾄﾗﾝｼﾞｽﾀｰ
	(Unit)					
901	CPWBN1560FCE1	BM	HR	N	E	LVDS/INV PWB UNIT LVDS/INV 基板ﾕﾆｯﾄ

57 FAX 電源基板ﾕﾆｯﾄ (FAX AC power supply unit)[AR-C260F/C260FP]

NO.	PARTS CODE	PRICE RANK Ex.	PRICE RANK Ja.	NEW MARK	PART RANK	DESCRIPTION
1	0FT23040224//	AD	DJ		C	Angle(TC-92 30X36X1T) [1] 金具
2	0FT23042251//	AP	EQ		C	Fin(AL1 30X30) [2] ﾌｨﾝ
3	0FT23075095//	AP	EQ		C	Connector(B6P-VH) [CN1] ｺﾈｸﾀ
4	0FT23194310//	AU	EZ		B	Thermistor(NTH11D8R0LA) [TH1] ｻﾐｽﾀ
5	0FT23314081//	AU	EZ		B	IC(UPC393C) [Z6] IC
7	0FT23423816//	AC	DJ		C	Screw(M3X8 S NP3 W・SW) [5] ｽﾓｰﾙﾜｯｼｬ W ｾﾑｽﾈｼﾞ
8	0FT23432963//	AC	DJ		C	Screw(M3X10 S NP3 W.SW) [6] ｽﾓｰﾙﾜｯｼｬ W ｾﾑｽﾈｼﾞ
9	0FT23485706//	AK	DX		C	Connector(B2B-PH-K-S) [CN4] ｺﾈｸﾀ
10	0FT23559467//	AR	EQ		B	Transistor(2SC3588 HFE=L:K) [Q11] ﾄﾗﾝｼﾞｽﾀ
11	0FT23562328//	AD	DJ		C	Resistor(RSMF2SL 68KΩJ) [R2] 酸化金属被膜抵抗器
12	0FT23562379//	AD	DJ		C	Resistor(RSMF12SL 1ΩJ) [R20] 酸化金属被膜抵抗器
13	0FT23562379//	AD	DJ		C	Resistor(RSMF12SL 1ΩJ) [R83] 酸化金属被膜抵抗器
14	0FT23562549//	AD	DJ		C	Resistor(RSMF12SL 330ΩJ) [R62] 酸化金属被膜抵抗器
15	0FT23562700//	AD	DJ		C	Resistor(RSMF12SL 47KΩJ) [R13] 酸化金属被膜抵抗器
16	0FT23562700//	AD	DJ		C	Resistor(RSMF12SL 47KΩJ) [R14] 酸化金属被膜抵抗器
17	0FT23562727//	AD	DJ		C	Resistor(RSMF12SL 100KΩJ) [R54] 酸化金属被膜抵抗器
18	0FT23562816//	AC	DJ		C	Resistor(RSMF1SL 2.2ΩJ) [R11] 酸化金属被膜抵抗器
19	0FT23562816//	AC	DJ		C	Resistor(RSMF1SL 2.2ΩJ) [R12] 酸化金属被膜抵抗器
20	0FT23562859//	AD	DJ		C	Resistor(RSMF1SL 10ΩJ) [R18] 酸化金属被膜抵抗器
21	0FT23563103//	AD	DJ		C	Resistor(RSMF1SL 47KΩJ) [R4] 酸化金属被膜抵抗器
22	0FT23563103//	AD	DJ		C	Resistor(RSMF1SL 47KΩJ) [R5] 酸化金属被膜抵抗器
23	0FT23563324//	AC	DJ		C	Resistor(RSMF2SL 100ΩJ) [R10] 酸化金属被膜抵抗器
24	0FT23563324//	AC	DJ		C	Resistor(RSMF2SL 100ΩJ) [R19] 酸化金属被膜抵抗器
25	0FT23598977//	AK	DX		C	Connector(B3B-PH-K-S) [CN2] ｺﾈｸﾀ
26	0FT23611329//	AK	DX		C	Capacitor(MMC-104K400) [C6] ﾌｨﾙﾑｺﾝﾃﾞﾝｻ
27	0FT23642925//	AK	DX		B	Reactor(TG0113MADS SK) [L4] ﾘｱｸﾄﾙ
28	0FT23644634//	AK	DX		B	Variable resistor(EVM-4LGA00B13) [RV1] 可変抵抗器
29	0FT23665429//	AU	EZ		B	IC(UPC78M24AHF) [Z2] IC
30	0FT23671666//	AU	EZ		B	IC(UPC78M12AHF) [Z1] IC
31	0FT23697355//	AU	EZ		B	Absorber(ERZV10D471) [NR1] ｻｰｼﾞｱﾌﾞｿｰﾊﾞ
32	0FT23736903//	AX	FG		B	Rectifier(SF10SC4) [RC2] 整流器
33	0FT23462226//	AD	DJ		C	Resistor(RK73K2ATD 470ΩJ) [R34] ﾁｯﾌﾟ抵抗器
34	0FT23462226//	AD	DJ		C	Resistor(RK73K2ATD 470ΩJ) [R65] ﾁｯﾌﾟ抵抗器
35	0FT23462234//	AD	DJ		C	Resistor(RK73K2ATD 1KΩJ) [R30] ﾁｯﾌﾟ抵抗器

57 FAX 電源基板ﾕﾆｯﾄ (FAX AC power supply unit)[AR-C260F/C260FP]

NO.	PARTS CODE	PRICE RANK Ex.	PRICE RANK Ja.	NEW MARK	PART RANK	DESCRIPTION
36	0FT23462234//	AD	DJ		C	Resistor(RK73K2ATD 1KΩJ) [R35] ﾁｯﾌﾟ抵抗器
37	0FT23462234//	AD	DJ		C	Resistor(RK73K2ATD 1KΩJ) [R41] ﾁｯﾌﾟ抵抗器
38	0FT23462234//	AD	DJ		C	Resistor(RK73K2ATD 1KΩJ) [R44] ﾁｯﾌﾟ抵抗器
39	0FT23462250//	AD	DJ		C	Resistor(RK73K2ATD 2.2KΩJ) [R38] ﾁｯﾌﾟ抵抗器
40	0FT23462250//	AD	DJ		C	Resistor(RK73K2ATD 2.2KΩJ) [R39] ﾁｯﾌﾟ抵抗器
41	0FT23462250//	AD	DJ		C	Resistor(RK73K2ATD 2.2KΩJ) [R52] ﾁｯﾌﾟ抵抗器
42	0FT23462250//	AD	DJ		C	Resistor(RK73K2ATD 2.2KΩJ) [R66] ﾁｯﾌﾟ抵抗器
43	0FT23462250//	AD	DJ		C	Resistor(RK73K2ATD 2.2KΩJ) [R68] ﾁｯﾌﾟ抵抗器
44	0FT23462269//	AD	DJ		C	Resistor(RK73K2ATD 10KΩJ) [R8] ﾁｯﾌﾟ抵抗器
45	0FT23462269//	AD	DJ		C	Resistor(RK73K2ATD 10KΩJ) [R17] ﾁｯﾌﾟ抵抗器
46	0FT23462269//	AD	DJ		C	Resistor(RK73K2ATD 10KΩJ) [R48] ﾁｯﾌﾟ抵抗器
47	0FT23462293//	AD	DJ		C	Resistor(RK73K2ATD 560ΩJ) [R31] ﾁｯﾌﾟ抵抗器
48	0FT23463362//	AD	DJ		C	Resistor(RK73K2ATD 180ΩJ) [R42] ﾁｯﾌﾟ抵抗器
49	0FT23536106//	AD	DJ		C	Resistor(RK73K2ATD 1.5KΩJ) [RX2] ﾁｯﾌﾟ抵抗器
50	0FT23536106//	AD	DJ		C	Resistor(RK73K2ATD 1.5KΩJ) [R22] ﾁｯﾌﾟ抵抗器
51	0FT23536106//	AD	DJ		C	Resistor(RK73K2ATD 1.5KΩJ) [R59] ﾁｯﾌﾟ抵抗器
52	0FT23538850//	AD	DJ		C	Resistor(RK73K2ATD 4.7KΩJ) [R46] ﾁｯﾌﾟ抵抗器
53	0FT23538850//	AD	DJ		C	Resistor(RK73K2ATD 4.7KΩJ) [R67] ﾁｯﾌﾟ抵抗器
54	0FT23538885//	AD	DJ		C	Resistor(RK73K2ATD 100ΩJ) [R69] ﾁｯﾌﾟ抵抗器
55	0FT23538915//	AD	DJ		C	Resistor(RK73K2ATD 5.6KΩJ) [R71] ﾁｯﾌﾟ抵抗器
56	0FT23538923//	AD	DJ		C	Resistor(RK73K2ATD 3.9KΩJ) [R37] ﾁｯﾌﾟ抵抗器
57	0FT23538974//	AD	DJ		C	Resistor(RK73K2ATD 2.7KΩJ) [R7] ﾁｯﾌﾟ抵抗器
58	0FT23538982//	AD	DJ		C	Resistor(RK73K2ATD 47ΩJ) [R23] ﾁｯﾌﾟ抵抗器
59	0FT23541509//	AK	DX		B	Zener diode(RD8.2M-B2) [D11] ﾁｯﾌﾟﾂｪﾅｰﾀﾞｲｵｰﾄﾞ
60	0FT23546047//	AD	DJ		C	Resistor(RK73K2ATD 100KΩJ) [R57] ﾁｯﾌﾟ抵抗器
61	0FT23546047//	AD	DJ		C	Resistor(RK73K2ATD 100KΩJ) [R63] ﾁｯﾌﾟ抵抗器
62	0FT23549119//	AF	DS		C	Capacitor(GRM40R103K25PT) [C10] ﾁｯﾌﾟｾﾗﾐｯｸｺﾝﾃﾞﾝｻ
63	0FT23549119//	AF	DS		C	Capacitor(GRM40R103K25PT) [C13] ﾁｯﾌﾟｾﾗﾐｯｸｺﾝﾃﾞﾝｻ
64	0FT23549119//	AF	DS		C	Capacitor(GRM40R103K25PT) [C14] ﾁｯﾌﾟｾﾗﾐｯｸｺﾝﾃﾞﾝｻ
65	0FT23549119//	AF	DS		C	Capacitor(GRM40R103K25PT) [C39] ﾁｯﾌﾟｾﾗﾐｯｸｺﾝﾃﾞﾝｻ
66	0FT23549119//	AF	DS		C	Capacitor(GRM40R103K25PT) [C50] ﾁｯﾌﾟｾﾗﾐｯｸｺﾝﾃﾞﾝｻ
67	0FT23549119//	AF	DS		C	Capacitor(GRM40R103K25PT) [C54] ﾁｯﾌﾟｾﾗﾐｯｸｺﾝﾃﾞﾝｻ
68	0FT23549119//	AF	DS		C	Capacitor(GRM40R103K25PT) [C55] ﾁｯﾌﾟｾﾗﾐｯｸｺﾝﾃﾞﾝｻ
69	0FT23551148//	AK	DX		B	Zener diode(RD12M-B2-T1) [D5] ﾁｯﾌﾟﾂｪﾅｰﾀﾞｲｵｰﾄﾞ
70	0FT23551377//	AK	DX		B	Diode(SFPM-52VL) [D62] ﾁｯﾌﾟﾀﾞｲｵｰﾄﾞ
71	0FT23557111//	AD	DJ		C	Resistor(RK73K2ATD 220ΩJ) [R21] ﾁｯﾌﾟ抵抗器
72	0FT23565505//	AD	DJ		C	Resistor(RK73K2ATD 220KΩJ) [R56] ﾁｯﾌﾟ抵抗器
73	0FT23578194//	AD	DJ		C	Resistor(RK73K2ATD 22ΩJ) [R43] ﾁｯﾌﾟ抵抗器
74	0FT23578194//	AD	DJ		C	Resistor(RK73K2ATD 22ΩJ) [R51] ﾁｯﾌﾟ抵抗器
75	0FT23581330//	AD	DJ		C	Capacitor(GRM40R104K25PT) [CX1] ﾁｯﾌﾟｾﾗﾐｯｸｺﾝﾃﾞﾝｻ
76	0FT23581330//	AD	DJ		C	Capacitor(GRM40R104K25PT) [CX2] ﾁｯﾌﾟｾﾗﾐｯｸｺﾝﾃﾞﾝｻ
77	0FT23581330//	AD	DJ		C	Capacitor(GRM40R104K25PT) [C36] ﾁｯﾌﾟｾﾗﾐｯｸｺﾝﾃﾞﾝｻ
78	0FT23583309//	AG	DX		B	Zener diode(RD5.6M-B2-T1) [D42] ﾁｯﾌﾟﾂｪﾅｰﾀﾞｲｵｰﾄﾞ
79	0FT23598470//	AG	DX		B	Zener diode(RD10M-B2-T1) [D46] ﾁｯﾌﾟﾂｪﾅｰﾀﾞｲｵｰﾄﾞ
80	0FT23624293//	AD	DJ		C	Resistor(RK73K2ATD 27KΩJ) [R16] ﾁｯﾌﾟ抵抗器
81	0FT23625591//	AD	DJ		C	Resistor(RK73K2ATD 1.8KΩJ) [R36] ﾁｯﾌﾟ抵抗器
82	0FT23625591//	AD	DJ		C	Resistor(RK73K2ATD 1.8KΩJ) [R40] ﾁｯﾌﾟ抵抗器
83	0FT23663914//	AD	DJ		C	Resistor(RK73K2ATD 5.1KΩJ) [R33] ﾁｯﾌﾟ抵抗器
84	0FT33122675//	AF	DS		B	Diode(KDS184RTK) [D6] ﾁｯﾌﾟﾀﾞｲｵｰﾄﾞ
85	0FT33122675//	AF	DS		B	Diode(KDS184RTK) [D10] ﾁｯﾌﾟﾀﾞｲｵｰﾄﾞ
86	0FT33122675//	AF	DS		B	Diode(KDS184RTK) [D12] ﾁｯﾌﾟﾀﾞｲｵｰﾄﾞ
87	0FT33122675//	AF	DS		B	Diode(KDS184RTK) [D44] ﾁｯﾌﾟﾀﾞｲｵｰﾄﾞ
88	0FT33122675//	AF	DS		B	Diode(KDS184RTK) [D45] ﾁｯﾌﾟﾀﾞｲｵｰﾄﾞ
89	0FT33122675//	AF	DS		B	Diode(KDS184RTK) [D47] ﾁｯﾌﾟﾀﾞｲｵｰﾄﾞ
90	0FT33122675//	AF	DS		B	Diode(KDS184RTK) [D54] ﾁｯﾌﾟﾀﾞｲｵｰﾄﾞ
91	0FT33122675//	AF	DS		B	Diode(KDS184RTK) [D55] ﾁｯﾌﾟﾀﾞｲｵｰﾄﾞ
92	0FT33122675//	AF	DS		B	Diode(KDS184RTK) [D61] ﾁｯﾌﾟﾀﾞｲｵｰﾄﾞ
93	0FT33122675//	AF	DS		B	Diode(KDS184RTK) [D63] ﾁｯﾌﾟﾀﾞｲｵｰﾄﾞ
94	0FT33122675//	AF	DS		B	Diode(KDS184RTK) [D66] ﾁｯﾌﾟﾀﾞｲｵｰﾄﾞ
95	0FT33189184//	AD	DJ		C	Capacitor(GRM40-034R104K50PT) [C24] ﾁｯﾌﾟｾﾗﾐｯｸｺﾝﾃﾞﾝｻ
96	0FT23095657//	AF	DS		B	Transister(2SC1815-Y:GR TPE2) [Q2] ﾄﾗﾝｼﾞｽﾀ
97	0FT23095657//	AF	DS		B	Transister(2SC1815-Y:GR TPE2) [Q7] ﾄﾗﾝｼﾞｽﾀ
98	0FT23095657//	AF	DS		B	Transister(2SC1815-Y:GR TPE2) [Q9] ﾄﾗﾝｼﾞｽﾀ
99	0FT23095657//	AF	DS		B	Transister(2SC1815-Y:GR TPE2) [Q12] ﾄﾗﾝｼﾞｽﾀ
100	0FT23124819//	AK	DX		C	Capacitor(KME25VB-220 TC-04) [C27] 電解ｺﾝﾃﾞﾝｻ
101	0FT23124827//	AF	DS		C	Capacitor(KME25VB-47 TC-04) [C29] 電解ｺﾝﾃﾞﾝｻ
102	0FT23204782//	AP	EQ		C	Capacitor(KME35VB-220 TC-04) [C23] 電解ｺﾝﾃﾞﾝｻ
103	0FT23204790//	AP	EQ		C	Capacitor(KME35VB-100 TC-04) [C17] 電解ｺﾝﾃﾞﾝｻ
104	0FT23204790//	AP	EQ		C	Capacitor(KME35VB-100 TC-04) [C25] 電解ｺﾝﾃﾞﾝｻ
105	0FT23241823//	AP	EQ		B	Diode(EG01ZV0) [D36] ﾀﾞｲｵｰﾄﾞ
106	0FT23259382//	AP	EQ		C	Capacitor(KME10VB-470 TC-04) [C37] 電解ｺﾝﾃﾞﾝｻ
107	0FT23259420//	AP	EQ		C	Capacitor(KME35VB-470 TC-04) [C20] 電解ｺﾝﾃﾞﾝｻ
108	0FT23259447//	AK	DX		C	Capacitor(KME50VB-1 TC-04) [C34] 電解ｺﾝﾃﾞﾝｻ
109	0FT23259498//	AK	DX		C	Capacitor(KME50VB-10 TC-04) [C15] 電解ｺﾝﾃﾞﾝｻ
110	0FT23259498//	AK	DX		C	Capacitor(KME50VB-10 TC-04) [C35] 電解ｺﾝﾃﾞﾝｻ
111	0FT23259498//	AK	DX		C	Capacitor(KME50VB-10 TC-04) [C56] 電解ｺﾝﾃﾞﾝｻ
112	0FT23287629//	AK	DX		B	Transister(2SA1015-Y TPE2) [Q6] ﾄﾗﾝｼﾞｽﾀ
113	0FT23287637//	AP	EQ		B	Transister(2SA1020-O:Y TPE6) [Q4] ﾄﾗﾝｼﾞｽﾀ
114	0FT23287696//	AP	EQ		B	Transister(2SC3225 TPE6) [Q3] ﾄﾗﾝｼﾞｽﾀ
115	0FT23287823//	AK	DX		C	Capacitor(KME50VB-22 TC-04) [C21] 電解ｺﾝﾃﾞﾝｻ

57 FAX 電源基板ﾕﾆｯﾄ (FAX AC power supply unit)[AR-C260F/C260FP]

NO.	PARTS CODE	PRICE RANK Ex.	PRICE RANK Ja.	NEW MARK	PART RANK	DESCRIPTION
116	0FT23319431//	AF	DS		B	Diode(1SS119-14 TD) [D64] ﾀﾞｲｵｰﾄﾞ
117	0FT23319431//	AF	DS		B	Diode(1SS119-14 TD) [D65] ﾀﾞｲｵｰﾄﾞ
118	0FT23326101//	AU	EZ		C	Capacitor(KME200VB-22 TC-04) [C48] 電解ｺﾝﾃﾞﾝｻ
119	0FT23329089//	AK	DX		C	Capacitor(KME50VB-47 TC-04) [C18] 電解ｺﾝﾃﾞﾝｻ
120	0FT23329089//	AK	DX		C	Capacitor(KME50VB-47 TC-04) [C42] 電解ｺﾝﾃﾞﾝｻ
121	0FT23379450//	AU	EZ		B	IC(AN1431T-TA) [Z7] IC
122	0FT23379450//	AU	EZ		B	IC(AN1431T-TA) [Z8] IC
123	0FT23394395//	AU	EZ		C	Capacitor(KME10VB-3300 TC-03) [C32] 電解ｺﾝﾃﾞﾝｻ
124	0FT23414892//	AF	DS		C	Resistor(RDF14 TS 820ΩJ) [R9] ｶｰﾎﾞﾝ抵抗器
125	0FT23415341//	AF	DS		C	Resistor(RDMF14 TS 22ΩJ) [R60] ｶｰﾎﾞﾝ抵抗器
126	0FT23415430//	AF	DS		C	Resistor(RDMF14 TS 100ΩJ) [R82] ｶｰﾎﾞﾝ抵抗器
127	0FT23415570//	AF	DS		C	Resistor(RDMF14 TS 1KΩJ) [RX1] ｶｰﾎﾞﾝ抵抗器
128	0FT23415570//	AF	DS		C	Resistor(RDMF14 TS 1KΩJ) [RX5] ｶｰﾎﾞﾝ抵抗器
129	0FT23415570//	AF	DS		C	Resistor(RDMF14 TS 1KΩJ) [RX6] ｶｰﾎﾞﾝ抵抗器
130	0FT23415600//	AF	DS		C	Resistor(RDMF14 TS 1.8KΩJ) [R89] ｶｰﾎﾞﾝ抵抗器
131	0FT23415643//	AF	DS		C	Resistor(RDMF14 TS 3.9KΩJ) [R58] ｶｰﾎﾞﾝ抵抗器
132	0FT23415651//	AF	DS		C	Resistor(RDMF14 TS 4.7KΩJ) [R49] ｶｰﾎﾞﾝ抵抗器
133	0FT23415716//	AF	DS		C	Resistor(RDMF14 TS 10KΩJ) [R53] ｶｰﾎﾞﾝ抵抗器
134	0FT23415740//	AF	DS		C	Resistor(RDMF14 TS 15KΩJ) [R45] ｶｰﾎﾞﾝ抵抗器
135	0FT23415899//	AF	DS		C	Resistor(RDMF14 TS 100KΩJ) [R55] ｶｰﾎﾞﾝ抵抗器
136	0FT23429199//	AK	DX		B	Diode(AK04V0) [D14] ﾀﾞｲｵｰﾄﾞ
137	0FT23484661//	AD	DJ		C	Resistor(RSMF12TS 0.22ΩJ) [R84] 酸化金属被膜抵抗器
138	0FT23486796//	AK	DX		C	Capacitor(DE0905-979R471K2K) [C11] ｾﾗﾐｯｸｺﾝﾃﾞﾝｻ
139	0FT23486850//	AK	DX		C	Capacitor(ECQ-B1H473KF4) [C12] ﾌｨﾙﾑｺﾝﾃﾞﾝｻ
140	0FT23486850//	AK	DX		C	Capacitor(ECQ-B1H473KF4) [C16] ﾌｨﾙﾑｺﾝﾃﾞﾝｻ
141	0FT23543641//	AK	DX		C	Fuse holder(EYF-52BCZ) [F1] ﾌｭｰｽﾞﾎﾙﾀﾞｰ
142	0FT23605507//	AK	DX		B	Diode(1GU42 TPA3) [D7] ﾀﾞｲｵｰﾄﾞ
143	0FT23605507//	AK	DX		B	Diode(1GU42 TPA3) [D9] ﾀﾞｲｵｰﾄﾞ
144	0FT23605507//	AK	DX		B	Diode(1GU42 TPA3) [D13] ﾀﾞｲｵｰﾄﾞ
145	0FT23605507//	AK	DX		B	Diode(1GU42 TPA3) [D43] ﾀﾞｲｵｰﾄﾞ
146	0FT23610810//	AK	DX		B	Diode(S5688GTPA3) [D1] ﾀﾞｲｵｰﾄﾞ
147	0FT23610810//	AK	DX		B	Diode(S5688GTPA3) [D3] ﾀﾞｲｵｰﾄﾞ
148	0FT23610810//	AK	DX		B	Diode(S5688GTPA3) [D8] ﾀﾞｲｵｰﾄﾞ
149	0FT23610810//	AK	DX		B	Diode(S5688GTPA3) [D20] ﾀﾞｲｵｰﾄﾞ
150	0FT23610810//	AK	DX		B	Diode(S5688GTPA3) [D21] ﾀﾞｲｵｰﾄﾞ
151	0FT23610810//	AK	DX		B	Diode(S5688GTPA3) [D22] ﾀﾞｲｵｰﾄﾞ
152	0FT23610810//	AK	DX		B	Diode(S5688GTPA3) [D23] ﾀﾞｲｵｰﾄﾞ
153	0FT23610810//	AK	DX		B	Diode(S5688GTPA3) [D48] ﾀﾞｲｵｰﾄﾞ
154	0FT23624285//	AK	DX		B	Diode(EG01CV0) [D52] ﾀﾞｲｵｰﾄﾞ
155	0FT23690482//	AD	DJ		C	Resistor(RSMF12TS 10ΩJ) [R32] 酸化金属被膜抵抗器
156	0FT23752267//	AD	DJ		C	Resistor(RSMF12TS 2.2ΩJ) [R50] 酸化金属被膜抵抗器
157	0FT23752267//	AD	DJ		C	Resistor(RSMF12TS 2.2ΩJ) [R86] 酸化金属被膜抵抗器
158	0FT33005385//	AD	DJ		C	Resistor(RSMF12TS 4.7KΩJ) [R87] 酸化金属被膜抵抗器
159	0FT33036442//	AD	DJ		C	Resistor(RSMF12TS 180ΩJ) [R61] 酸化金属被膜抵抗器
160	0FT33055277//	AK	DX		C	Terminal(TP00448-41) [4] 端子
161	0FT33186711//	AR	EQ		B	Transister(2SA1625-T HFE=M:L) [Q8] ﾄﾗﾝｼﾞｽﾀ
162	0FT33213786//	AK	DX		C	Capacitor(DE1007-486E222M-KH) [C2] ｾﾗﾐｯｸｺﾝﾃﾞﾝｻ
163	0FT33213786//	AK	DX		C	Capacitor(DE1007-486E222M-KH) [C3] ｾﾗﾐｯｸｺﾝﾃﾞﾝｻ
164	0FT33295049//	AK	DX		C	Capacitor(DE0605-979SL470J2K) [C7] ｾﾗﾐｯｸｺﾝﾃﾞﾝｻ
165	0FT33388799//	AP	EQ		C	Capacitor(DE1207-486E332M-KH) [C8] ｾﾗﾐｯｸｺﾝﾃﾞﾝｻ
166	0FT33552203//	AD	DJ		C	Resistor(RSPF12TS 470KΩJ) [R1] 電力形被膜抵抗器
167	0FT33570120//	AD	DJ		C	Resistor(RSPF12TS 150KΩJ) [R90] 電力形被膜抵抗器
168	0FT33008015//	AW	FG		B	Rectifier(D2SB60) [RC1] 整流器
169	0FT33035349//	AK	DX		B	Diode(RL2Z LF-A1) [D38] ﾀﾞｲｵｰﾄﾞ
170	0FT33085427//	AU	EZ		B	Transister(2SA1400 HFE=K) [Q10] ﾄﾗﾝｼﾞｽﾀ
⚠ 171	0FT33146922//	AK	DX		A	Fuse(51S040L AC125V 4A) [F1] ｶﾞﾗｽ管ﾌｭｰｽﾞ
172	0FT33173377//	BA	FX		B	Reactle(LF-4D-E822) [L1] ﾘｱｸﾄﾙ
173	0FT33197209//	BA	FX		B	Photocoupler(TLP747J(D4) 0884) [PC2] ﾌｫﾄｶﾌﾟﾗ
174	0FT33199031//	AW	FG		B	Transister(2SC4130-O.Y) [Q1] ﾄﾗﾝｼﾞｽﾀ
175	0FT33213581//	AP	EQ		C	Fin(ST-S 20G PT1 15X35X10) [9] ﾌｨﾝ
176	0FT33262132//	AP	EQ		B	Photocoupler(PC123FY2) [PC1] ﾌｫﾄｶﾌﾟﾗ
177	0FT33262132//	AP	EQ		B	Photocoupler(PC123FY2) [PC3] ﾌｫﾄｶﾌﾟﾗ
178	0FT33293976//	AF	DS		C	Capacitor(DD104-63CH470J50) [C38] ｾﾗﾐｯｸｺﾝﾃﾞﾝｻ
179	0FT33331673//	AZ	FQ		B	Regurator(UPC29M33HF) [Z4] IC ﾚｷﾞｭﾚｰﾀ
180	0FT33441622//	AL	EB		C	Capacitor(ECQU2A104ML P=15.0MM) [C4] ﾌｨﾙﾑｺﾝﾃﾞﾝｻ
181	0FT33441630//	AP	EQ		C	Capacitor(ECQU2A224ML P=15.0MM) [C1] ﾌｨﾙﾑｺﾝﾃﾞﾝｻ
182	0FT33478232//	AZ	FQ		C	Capacitor(HU4 2D 331MRXS3SS DIA22X30L) [C5] 電解ｺﾝﾃﾞﾝｻ
183	0FT33509685//	AP	EQ		C	Connector(B04B-XASK-1-A) [CN3] ｺﾈｸﾀ
184	0FT33529090//	AP	EQ		C	Tarminal(85163 #250) [L] ﾌｧｽﾄﾝ端子
185	0FT33529090//	AP	EQ		C	Tarminal(85163 #250) [L1F] ﾌｧｽﾄﾝ端子
186	0FT33529090//	AP	EQ		C	Tarminal(85163 #250) [N] ﾌｧｽﾄﾝ端子
187	0FT33529090//	AP	EQ		C	Tarminal(85163 #250) [N1F] ﾌｧｽﾄﾝ端子
188	0FT33568266//	BA	FX		B	Relay(SDT-S-112LMR) [RL3] ﾘﾚｰ
189	0FT33570163//	AF	DS		C	Resistor(RSPF1B 150KΩJ) [R24] 電力形被膜抵抗器
190	0FT33570163//	AF	DS		C	Resistor(RSPF1B 150KΩJ) [R25] 電力形被膜抵抗器
191	0FT33603762//	BB	GD		B	IC(PQ12RF1) [Z3] IC
192	0FT33603789//	BF	GN		B	Transformer(CXM41100-505) [T1] 変圧器
193	0FT33638361//	BC	GJ		B	Relay(G2R-1A-E-TV8-ASI DC12V) [RL1] ﾘﾚｰ
194	0FT33638361//	BC	GJ		B	Relay(G2R-1A-E-TV8-ASI DC12V) [RL2] ﾘﾚｰ
⚠ 195	0FT35863281//	BF	GN		B	Transformer(EXT43420-635C) [T2] 変圧器

57 FAX 電源基板ﾕﾆｯﾄ (FAX AC power supply unit)[AR-C260F/C260FP]

NO.	PARTS CODE	PRICE RANK Ex.	PRICE RANK Ja.	NEW MARK	PART RANK	DESCRIPTION
	(Unit)					
901	RDENC0004FCZZ	BV	RB		E	FAX AC power supply unit FAX AC 電源ﾕﾆｯﾄ

58 PRTC 基板 (PRTC PWB)[AR-C260M/C260FP]

NO.	PARTS CODE	PRICE RANK Ex.	PRICE RANK Ja.	NEW MARK	PART RANK	DESCRIPTION
1	PCAPH0010GCZZ	AD	DJ		C	Cap(JM-2W-96) [JP1,JP3,JP7] ｷｬｯﾌﾟ
2	PCOVP1468FCZZ	AD	DJ		D	FAX battery cover [BT1] FAX ﾃﾞﾝﾁｶﾊﾞｰ
3	PRDAR0057FCZ1	AF	DS	N	C	Heat sink(C16UG16-30) [IC12] ﾎｳﾈﾂﾊﾞﾝ
4	PRDAF0089FCZZ	AU	EZ		C	Heat Sink(MI-MBA25101-23W/2.54BU) [IC26] ﾎｳﾈﾂﾊﾞﾝ
5	PSHEZ4684FCZZ	AC	DJ		C	Sheet(2067B) [IC12] ｸｰﾙｼｰﾄ
6	QCNCM1182FCZZ	AM	EG		C	Connector (Board to Board) (100pin PCI CN)(100P9.2-JXKS-GB) [CN12,CN8] ｺﾈｸﾀｰ
7	QCNCM1183FCZZ	AM	EG		C	Connector (Board to Board) (100pin PCI CN)(100P15.2-JXKS-GB) [CN9] ｺﾈｸﾀｰ
8	QCNCP0340QCZZ	AC	DJ		C	Connector(3pin) [CN14] ｺﾈｸﾀｰ
9	QSOCN0002ESZZ	AH	DX		C	Socket(RBE42-36K11) [CN15] ｿｹｯﾄ
10	QCNCW1190FCZZ	AN	EG		C	Connector (Board to Board)(TX24-100R-LT-H1) [CN1] ｺﾈｸﾀ -
11	QPiN-0003GCZZ	AC	DJ		C	Pin(T3B-SQ) [JP1,JP3,JP7] ﾋﾟﾝ
12	QSOCN0005ESZZ	AE	DS		C	Socket(UBR234K2200) [CN13] ｿｹｯﾄ
13	QSOCZ0001QSZZ	AL	EB		C	Socket(DMM168-FLAA2-3A133) [CN10,CN11] ｿｹｯﾄ
14	QSOCZ0002QSZZ	AD	DJ		C	IC socket [IC20] IC ｿｹｯﾄ
15	QSOCZ0073FCNA	AL	EB		C	DIMM Socket(72pin Flash DIMM)(DMM2-SD72A-113) [CN3,CN4,CN6,CN7] DIMM ｿｹｯﾄ
16	RCiLZ0353AFZZ	AH	DX		C	Chock coil(PLP3216S121SL2)(Typ120Ω) [L8] ｺﾓﾝﾓｰﾄﾞﾁｮｰｸｺｲﾙ
17	RCORF1057ACZZ	AB	DJ		C	Ferrite beads(BLM21P221SG) [L6,L9,L11] ﾌｪﾗｲﾄﾋﾞｰｽﾞ
18	RCRSP0080FCZZ	AF	DS		B	Crystal(16.345MHz)(AT-51,16.345MHz) [Y3] ｸﾘｽﾀﾙ
20	RCRSP6676RCZZ	AG	DX		B	Crystal(32.768KHz) [Y1] ｸﾘｽﾀﾙ
21	RFiLN0048FCZZ	AC	DJ		C	Chip Inductor(BLM10B121SBPTM) [L3,L4] ｲﾝﾀﾞｸﾀｰ
22	RH-iX1013ACZZ	BK	HC		B	SDRAM (256Mb)(W982516BH-75) [IC27,IC32,IC39,IC46] SDRAM (256Mb)
23	RMPTR4100ACZZ	AB	DD		B	Block resistor(10Ω×4) [BR22,BR23,BR24,BR25,BR26] ﾌﾞﾛｯｸﾃｲｺｳ
	RMPTR4100ACZZ	AB	DD		B	Block resistor(10Ω×4) [BR27,BR28,BR29,BR30,BR31] ﾌﾞﾛｯｸﾃｲｺｳ
	RMPTR4100ACZZ	AB	DD		B	Block resistor(10Ω×4) [BR32,BR33,BR34,BR35,BR36] ﾌﾞﾛｯｸﾃｲｺｳ
	RMPTR4100ACZZ	AB	DD		B	Block resistor(10Ω×4) [BR40,BR41,BR42,BR43,BR47] ﾌﾞﾛｯｸﾃｲｺｳ
	RMPTR4100ACZZ	AB	DD		B	Block resistor(10Ω×4) [BR48,BR50,BR53,BR55,BR58] ﾌﾞﾛｯｸﾃｲｺｳ
	RMPTR4100ACZZ	AB	DD		B	Block resistor(10Ω×4) [BR60,BR80,BR83,BR84,BR85] ﾌﾞﾛｯｸﾃｲｺｳ
	RMPTR4100ACZZ	AB	DD		B	Block resistor(10Ω×4) [BR86,BR87,BR88,BR89,BR90] ﾌﾞﾛｯｸﾃｲｺｳ
	RMPTR4100ACZZ	AB	DD		B	Block resistor(10Ω×4) [BR92,BR93,BR94,BR95,BR96,BR97] ﾌﾞﾛｯｸﾃｲｺｳ
24	RMPTR4103ACZZ	AB	DD		B	Block resistor(10KΩ×4) [BR1,BR2,BR3,BR4,BR5] ﾌﾞﾛｯｸﾃｲｺｳ
	RMPTR4103ACZZ	AB	DD		B	Block resistor(10KΩ×4) [BR6,BR7,BR8,BR9,BR10] ﾌﾞﾛｯｸﾃｲｺｳ
	RMPTR4103ACZZ	AB	DD		B	Block resistor(10KΩ×4) [BR11,BR12,BR21,BR49,BR51] ﾌﾞﾛｯｸﾃｲｺｳ
	RMPTR4103ACZZ	AB	DD		B	Block resistor(10KΩ×4) [BR54,BR57,BR61,BR62,BR64] ﾌﾞﾛｯｸﾃｲｺｳ
	RMPTR4103ACZZ	AB	DD		B	Block resistor(10KΩ×4) [BR65,BR66,BR68,BR69,BR70] ﾌﾞﾛｯｸﾃｲｺｳ
	RMPTR4103ACZZ	AB	DD		B	Block resistor(10KΩ×4) [BR71,BR73,BR78,BR81,BR82,BR91] ﾌﾞﾛｯｸﾃｲｺｳ
25	RMPTR4330ACZZ	AB	DD		B	Block resistor(33Ω×4) [BR13, BR14,BR15,BR16,BR17] ﾌﾞﾛｯｸﾃｲｺｳ
	RMPTR4330ACZZ	AB	DD		B	Block resistor(33Ω×4) [BR18,BR19,BR20,BR37,BR38] ﾌﾞﾛｯｸﾃｲｺｳ
	RMPTR4330ACZZ	AB	DD		B	Block resistor(33Ω×4) [BR39,BR44,BR45,BR46,BR52] ﾌﾞﾛｯｸﾃｲｺｳ
	RMPTR4330ACZZ	AB	DD		B	Block resistor(33Ω×4) [BR56,BR59,BR63,BR67,BR72] ﾌﾞﾛｯｸﾃｲｺｳ
	RMPTR4330ACZZ	AB	DD		B	Block resistor(33Ω×4) [BR74,BR75,BR76,BR77,BR79] ﾌﾞﾛｯｸﾃｲｺｳ
	RMPTR4330ACZZ	AB	DD		B	Block resistor(33Ω×4) [BR98,BR99,BR100,BR101,BR102] ﾌﾞﾛｯｸﾃｲｺｳ
	RMPTR4330ACZZ	AB	DD		B	Block resistor(33Ω×4) [BR103,BR104,BR105,BR106] ﾌﾞﾛｯｸﾃｲｺｳ
⚠ 26	UBATL2033SCZZ	AK	EB		B	Battery(CR2032-H03) [BT1] ﾊﾞｯﾃﾘｰ
27	VCAAPF0JJ107M	AF	DS		C	Capacitor(PXA 100μF/6.3V)(PXA6.3VC100MF60) [C53,C106,C327] ｺﾝﾃﾞﾝｻｰ
28	VCCCCZ1HH101J	AA	DD		C	Capacitor(50WV 100pF) [C293,C294,C295,C296,C297] ｺﾝﾃﾞﾝｻｰ
	VCCCCZ1HH101J	AA	DD		C	Capacitor(50WV 100pF) [C298,C299,C300,C301,C302] ｺﾝﾃﾞﾝｻｰ
	VCCCCZ1HH101J	AA	DD		C	Capacitor(50WV 100pF) [C303,C304,C305,C306,C307] ｺﾝﾃﾞﾝｻｰ
	VCCCCZ1HH101J	AA	DD		C	Capacitor(50WV 100pF) [C308,C309] ｺﾝﾃﾞﾝｻｰ
29	VCCCCZ1HH220J	AA	DD		C	Capacitor(50WV 22pF) [C153,C176,C286,C290,C329,C330] ｺﾝﾃﾞﾝｻｰ
30	VCEAPH1VC225M	AC	DD		C	Capacitor(2.2μF/35V) [C146,C147,C148,C149,C193] ｺﾝﾃﾞﾝｻｰ
	VCEAPH1VC225M	AC	DD		C	Capacitor(2.2μF/35V) [C199,C256,C257] ｺﾝﾃﾞﾝｻｰ
31	VCEAPS1AC227M	AD	DJ		C	Capacitor(220μF/10V (MVY)) [C2,C44,C45,C276,C277] ｺﾝﾃﾞﾝｻｰ
32	VCEAPS1CC106M	AC	DD		C	Capacitor(16WV 10μF) [C21,C38,C271,C272] ｺﾝﾃﾞﾝｻｰ
33	VCEAPS1CC226M	AC	DJ		C	Capacitor(22μF/16V) [C57,C102,C279,C314] ｺﾝﾃﾞﾝｻｰ
34	VCEAPS1CC476M	AC	DJ		C	Capacitor(47μF/16V) [C31,C39,C52,C118,C139] ｺﾝﾃﾞﾝｻｰ
	VCEAPS1CC476M	AC	DJ		C	Capacitor(47μF/16V) [C194,C260] ｺﾝﾃﾞﾝｻｰ
35	VCEAPZ1EW107M	AD	DJ		C	Capacitor(25WV 100μF) [C20] ｺﾝﾃﾞﾝｻｰ
37	VCKYCZ1CF104Z	AB	DD		C	Capacitor(16WV 0.1μF) [C3,C4,C5,C6,C10] ｺﾝﾃﾞﾝｻｰ
	VCKYCZ1CF104Z	AB	DD		C	Capacitor(16WV 0.1μF) [C12,C23,C24,C25,C26] ｺﾝﾃﾞﾝｻｰ
	VCKYCZ1CF104Z	AB	DD		C	Capacitor(16WV 0.1μF) [C28,C29,C30,C32,C33] ｺﾝﾃﾞﾝｻｰ
	VCKYCZ1CF104Z	AB	DD		C	Capacitor(16WV 0.1μF) [C35,C36,C37,C40,C41] ｺﾝﾃﾞﾝｻｰ
	VCKYCZ1CF104Z	AB	DD		C	Capacitor(16WV 0.1μF) [C42,C46,C51,C54,C55] ｺﾝﾃﾞﾝｻｰ
	VCKYCZ1CF104Z	AB	DD		C	Capacitor(16WV 0.1μF) [C56,C58,C59,C61,C62] ｺﾝﾃﾞﾝｻｰ

58 PRTC 基板 (PRTC PWB)[AR-C260M/C260FP]

NO.	PARTS CODE	PRICE RANK Ex.	PRICE RANK Ja.	NEW MARK	PART RANK	DESCRIPTION
37	VCKYCZ1CF104Z	AB	DD		C	Capacitor(16WV 0.1μF) [C67,C68,C70,C71,C72] ｺﾝﾃﾞﾝｻｰ
	VCKYCZ1CF104Z	AB	DD		C	Capacitor(16WV 0.1μF) [C74,C75,C77,C78,C79] ｺﾝﾃﾞﾝｻｰ
	VCKYCZ1CF104Z	AB	DD		C	Capacitor(16WV 0.1μF) [C80,C81,C88,C89,C91] ｺﾝﾃﾞﾝｻｰ
	VCKYCZ1CF104Z	AB	DD		C	Capacitor(16WV 0.1μF) [C92,C93,C94,C95,C96] ｺﾝﾃﾞﾝｻｰ
	VCKYCZ1CF104Z	AB	DD		C	Capacitor(16WV 0.1μF) [C97,C101,C103,C107,C108] ｺﾝﾃﾞﾝｻｰ
	VCKYCZ1CF104Z	AB	DD		C	Capacitor(16WV 0.1μF) [C110,C112,C113,C114,C117] ｺﾝﾃﾞﾝｻｰ
	VCKYCZ1CF104Z	AB	DD		C	Capacitor(16WV 0.1μF) [C119,C120,C121,C122,C127] ｺﾝﾃﾞﾝｻｰ
	VCKYCZ1CF104Z	AB	DD		C	Capacitor(16WV 0.1μF) [C128,C129,C130,C131,C132] ｺﾝﾃﾞﾝｻｰ
	VCKYCZ1CF104Z	AB	DD		C	Capacitor(16WV 0.1μF) [C134,C136,C138,C140,C143] ｺﾝﾃﾞﾝｻｰ
	VCKYCZ1CF104Z	AB	DD		C	Capacitor(16WV 0.1μF) [C144,C145,C155,C160,C161] ｺﾝﾃﾞﾝｻｰ
	VCKYCZ1CF104Z	AB	DD		C	Capacitor(16WV 0.1μF) [C166,C167,C169,C174,C175] ｺﾝﾃﾞﾝｻｰ
	VCKYCZ1CF104Z	AB	DD		C	Capacitor(16WV 0.1μF) [C177,C180,C182,C185,C189] ｺﾝﾃﾞﾝｻｰ
	VCKYCZ1CF104Z	AB	DD		C	Capacitor(16WV 0.1μF) [C190,C191,C192,C196,C200] ｺﾝﾃﾞﾝｻｰ
	VCKYCZ1CF104Z	AB	DD		C	Capacitor(16WV 0.1μF) [C201,C203,C204,C205,C217] ｺﾝﾃﾞﾝｻｰ
	VCKYCZ1CF104Z	AB	DD		C	Capacitor(16WV 0.1μF) [C218,C219,C220,C223,C224] ｺﾝﾃﾞﾝｻｰ
	VCKYCZ1CF104Z	AB	DD		C	Capacitor(16WV 0.1μF) [C225,C226,C230,C231,C232] ｺﾝﾃﾞﾝｻｰ
	VCKYCZ1CF104Z	AB	DD		C	Capacitor(16WV 0.1μF) [C234,C235,C236,C238,C240] ｺﾝﾃﾞﾝｻｰ
	VCKYCZ1CF104Z	AB	DD		C	Capacitor(16WV 0.1μF) [C241,C242,C243,C245,C247] ｺﾝﾃﾞﾝｻｰ
	VCKYCZ1CF104Z	AB	DD		C	Capacitor(16WV 0.1μF) [C248,C250,C251,C252,C253] ｺﾝﾃﾞﾝｻｰ
	VCKYCZ1CF104Z	AB	DD		C	Capacitor(16WV 0.1μF) [C254,C255,C258,C259,C261] ｺﾝﾃﾞﾝｻｰ
	VCKYCZ1CF104Z	AB	DD		C	Capacitor(16WV 0.1μF) [C263,C264,C265,C266,C267] ｺﾝﾃﾞﾝｻｰ
	VCKYCZ1CF104Z	AB	DD		C	Capacitor(16WV 0.1μF) [C268,C274,C278,C280,C281] ｺﾝﾃﾞﾝｻｰ
	VCKYCZ1CF104Z	AB	DD		C	Capacitor(16WV 0.1μF) [C282,C283,C284,C285,C287] ｺﾝﾃﾞﾝｻｰ
	VCKYCZ1CF104Z	AB	DD		C	Capacitor(16WV 0.1μF) [C292,C315,C316,C322,C323] ｺﾝﾃﾞﾝｻｰ
38	VCKYCZ1HB102K	AA	DD		C	Capacitor(50WV 1000pF) [C69,C84,C87,C90,C111] ｺﾝﾃﾞﾝｻｰ
	VCKYCZ1HB102K	AA	DD		C	Capacitor(50WV 1000pF) [C116,C123,C142,C163,C164] ｺﾝﾃﾞﾝｻｰ
	VCKYCZ1HB102K	AA	DD		C	Capacitor(50WV 1000pF) [C195,C202,C273,C331] ｺﾝﾃﾞﾝｻｰ
39	VCKYCZ1HF103Z	AA	DD		C	Capacitor(0.01μF/50V) [C9,C11,C47,C48,C49] ｺﾝﾃﾞﾝｻｰ
	VCKYCZ1HF103Z	AA	DD		C	Capacitor(0.01μF/50V) [C50,C60,C63,C64,C65] ｺﾝﾃﾞﾝｻｰ
	VCKYCZ1HF103Z	AA	DD		C	Capacitor(0.01μF/50V) [C66,C73,C76,C82,C83] ｺﾝﾃﾞﾝｻｰ
	VCKYCZ1HF103Z	AA	DD		C	Capacitor(0.01μF/50V) [C86,C98,C99,C100,C104] ｺﾝﾃﾞﾝｻｰ
	VCKYCZ1HF103Z	AA	DD		C	Capacitor(0.01μF/50V) [C105,C109,C115,C124,C133] ｺﾝﾃﾞﾝｻｰ
	VCKYCZ1HF103Z	AA	DD		C	Capacitor(0.01μF/50V) [C135,C137,C162,C165,C181] ｺﾝﾃﾞﾝｻｰ
	VCKYCZ1HF103Z	AA	DD		C	Capacitor(0.01μF/50V) [C221,C229,C237,C239,C249] ｺﾝﾃﾞﾝｻｰ
	VCKYCZ1HF103Z	AA	DD		C	Capacitor(0.01μF/50V) [C262,C288,C289,C328,C332] ｺﾝﾃﾞﾝｻｰ
40	VHDRB051L40-1	AE	DS		B	Diode(RB051L40) [D5] ﾀﾞｲｵｰﾄﾞ
41	VHDRB451F//-1	AD	DS		B	Diode(RB451F) [D3,D4,D6,D8,D9] ﾀﾞｲｵｰﾄﾞ
42	VHi107AP66C-1	BX	TF		B	Microcontroller(XPC107APX66LC) [IC40] IC
43	VHi1085CZAD-1	AH	DX		B	Voltage Regulator(PJ1085CZ) [IC12] IC
44	VHi2309SC1H-1	AT	EZ		B	Zero Delay Buffer(CY2309SC-1H) [IC29] IC
45	VHi60852ATB-1	AX	FG		B	USB Controller(ML60852ATB) [IC45] IC
46	VHi74LCX08MTC	AE	DJ		B	IC(74LCX08MTC) [IC28,IC1] IC
47	VHi74LCX14MTC	AE	DJ		B	IC(74LCX14MTC) [IC2,IC8,IC36] IC
48	VHi74LCX244MT	AM	DX		B	IC(74LCX244MT) [IC3,IC4,IC6,IC7,IC9] IC
	VHi74LCX244MT	AM	DX		B	IC(74LCX244MT) [IC10,IC18,IC19,IC21,IC23] IC
	VHi74LCX244MT	AM	DX		B	IC(74LCX244MT) [IC24,IC25] IC
49	VHi74LCX245MT	AM	DX		B	IC(74LCX245MT) [IC14,IC15,IC16,IC17,IC52] IC
50	VHi74LVX16128	AP	EQ		B	IC(74LVX16128) [IC48] ﾄﾞﾗｲﾊﾞ IC
51	VHi755B300E-1	BZ	TF		B	CPU(XPC755BPX300LE) [IC26] IC
52	VHi7SZ125M5-1	AE	DS		B	LOGIC(NC7SZ125M5X) [IC44] IC
55	VHiD3032+++-1	AX	FG	N	B	ASIC(D3032) [IC31] IC
56	VHiD8501A++-1	BS	MW	N	B	ASIC(D8501A) [IC22] IC
57	VHiEES04L400P	AG	DX		B	EEPROM(CAT24WC04P) [IC20] EEPROM
60	VHiNJM2903M/-	AD	DJ		B	IC(NJM2903M) [IC37] IC
61	VHiNJU6356E-1	AK	DX		B	IC(NJU6356E) [IC38] IC
62	VHiPST598DN-1	AF	DS		B	Reset IC(PST598DNR) [IC34] IC
63	VHiPST598iN-1	AF	DS		B	IC(PST598I) [IC33] IC
64	VHiR1117D25-1	AG	DS		B	Voltage Regulator(RC1117D25X) [IC49] IC
67	VRS-CZ1JD000J	AA	DD		C	Resistor(1/16W 0Ω ±5%) [R6,R12,R13,R14,R15] 抵抗
	VRS-CZ1JD000J	AA	DD		C	Resistor(1/16W 0Ω ±5%) [R19,R21,R23,R24,R25] 抵抗
	VRS-CZ1JD000J	AA	DD		C	Resistor(1/16W 0Ω ±5%) [R26,R27,R28,R29,R30] 抵抗
	VRS-CZ1JD000J	AA	DD		C	Resistor(1/16W 0Ω ±5%) [R33,R34,R35,R36,R37] 抵抗
	VRS-CZ1JD000J	AA	DD		C	Resistor(1/16W 0Ω ±5%) [R38,R39,R41,R52,R54] 抵抗
	VRS-CZ1JD000J	AA	DD		C	Resistor(1/16W 0Ω ±5%) [R55,R56,R57,R58,R59] 抵抗
	VRS-CZ1JD000J	AA	DD		C	Resistor(1/16W 0Ω ±5%) [R60,R66,R82,R83,R105] 抵抗
	VRS-CZ1JD000J	AA	DD		C	Resistor(1/16W 0Ω ±5%) [R109,R118,R122,R124,R146] 抵抗
	VRS-CZ1JD000J	AA	DD		C	Resistor(1/16W 0Ω ±5%) [R148,R150,R151,R152,R156] 抵抗
	VRS-CZ1JD000J	AA	DD		C	Resistor(1/16W 0Ω ±5%) [R157,R158,R159,R160,R166] 抵抗
	VRS-CZ1JD000J	AA	DD		C	Resistor(1/16W 0Ω ±5%) [R171,R173,R175,R201,R229] 抵抗
	VRS-CZ1JD000J	AA	DD		C	Resistor(1/16W 0Ω ±5%) [R238,R241,R245,R250,R254] 抵抗
	VRS-CZ1JD000J	AA	DD		C	Resistor(1/16W 0Ω ±5%) [R267,R268,R269,R270,R271] 抵抗
	VRS-CZ1JD000J	AA	DD		C	Resistor(1/16W 0Ω ±5%) [R273,R280,R294,R296,R300] 抵抗
	VRS-CZ1JD000J	AA	DD		C	Resistor(1/16W 0Ω ±5%) [R306,R307,R313,R314,R315] 抵抗
	VRS-CZ1JD000J	AA	DD		C	Resistor(1/16W 0Ω ±5%) [R316,R321,R325,R333,R345] 抵抗
	VRS-CZ1JD000J	AA	DD		C	Resistor(1/16W 0Ω ±5%) [R348,R369,R371,R373,R383] 抵抗
	VRS-CZ1JD000J	AA	DD		C	Resistor(1/16W 0Ω ±5%) [R384,R396,R397,R398,R399] 抵抗
	VRS-CZ1JD000J	AA	DD		C	Resistor(1/16W 0Ω ±5%) [R400,R409,R410,R421,R443] 抵抗
	VRS-CZ1JD000J	AA	DD		C	Resistor(1/16W 0Ω ±5%) [R445,R468,R493,R521,R532] 抵抗
	VRS-CZ1JD000J	AA	DD		C	Resistor(1/16W 0Ω ±5%) [R537,R540,R548,R549,R555] 抵抗
	VRS-CZ1JD000J	AA	DD		C	Resistor(1/16W 0Ω ±5%) [R556,R557,R558,R566,R574] 抵抗

58 PRTC 基板 (PRTC PWB)[AR-C260M/C260FP]

NO.	PARTS CODE	PRICE RANK Ex.	PRICE RANK Ja.	NEW MARK	PART RANK	DESCRIPTION
67	VRS−CZ1JD000J	AA	DD		C	Resistor(1/16W 0Ω ±5%) [R604,R607,R608,R611,R612] 抵抗
	VRS−CZ1JD000J	AA	DD		C	Resistor(1/16W 0Ω ±5%) [R615,R618,R620] 抵抗
68	VRS−CZ1JD100J	AA	DD		C	Resistor(1/16W 10Ω ±5%) [R169,R178,R179,R180,R181] 抵抗
	VRS−CZ1JD100J	AA	DD		C	Resistor(1/16W 10Ω ±5%) [R182,R184,R185,R187,R188] 抵抗
	VRS−CZ1JD100J	AA	DD		C	Resistor(1/16W 10Ω ±5%) [R189,R190,R191,R194,R195] 抵抗
	VRS−CZ1JD100J	AA	DD		C	Resistor(1/16W 10Ω ±5%) [R196,R200,R203,R206,R208] 抵抗
	VRS−CZ1JD100J	AA	DD		C	Resistor(1/16W 10Ω ±5%) [R210,R213,R217,R218,R222] 抵抗
	VRS−CZ1JD100J	AA	DD		C	Resistor(1/16W 10Ω ±5%) [R223,R224,R225,R227,R228] 抵抗
	VRS−CZ1JD100J	AA	DD		C	Resistor(1/16W 10Ω ±5%) [R236,R243,R248,R259,R260] 抵抗
	VRS−CZ1JD100J	AA	DD		C	Resistor(1/16W 10Ω ±5%) [R261,R264,R266,R299,R308] 抵抗
	VRS−CZ1JD100J	AA	DD		C	Resistor(1/16W 10Ω ±5%) [R317,R318,R319,R320,R322] 抵抗
	VRS−CZ1JD100J	AA	DD		C	Resistor(1/16W 10Ω ±5%) [R323,R324,R337,R352,R353] 抵抗
	VRS−CZ1JD100J	AA	DD		C	Resistor(1/16W 10Ω ±5%) [R388,R389,R391,R392,R411] 抵抗
	VRS−CZ1JD100J	AA	DD		C	Resistor(1/16W 10Ω ±5%) [R412,R413,R414,R415,R434] 抵抗
	VRS−CZ1JD100J	AA	DD		C	Resistor(1/16W 10Ω ±5%) [R455,R465,R467,R490,R499] 抵抗
	VRS−CZ1JD100J	AA	DD		C	Resistor(1/16W 10Ω ±5%) [R501,R504,R507,R513,R545] 抵抗
	VRS−CZ1JD100J	AA	DD		C	Resistor(1/16W 10Ω ±5%) [R634,R635] 抵抗
69	VRS−CZ1JD102J	AA	DD		C	Resistor(1/16W 1KΩ ±5%) [R1,R3,R7,R8,R11] 抵抗
	VRS−CZ1JD102J	AA	DD		C	Resistor(1/16W 1KΩ ±5%) [R20,R42,R45,R62,R64] 抵抗
	VRS−CZ1JD102J	AA	DD		C	Resistor(1/16W 1KΩ ±5%) [R68,R94,R100,R102,R107] 抵抗
	VRS−CZ1JD102J	AA	DD		C	Resistor(1/16W 1KΩ ±5%) [R117,R255,R338,R366,R380] 抵抗
	VRS−CZ1JD102J	AA	DD		C	Resistor(1/16W 1KΩ ±5%) [R405,R422,R423,R424,R436] 抵抗
	VRS−CZ1JD102J	AA	DD		C	Resistor(1/16W 1KΩ ±5%) [R437,R452,R562,R595,R596] 抵抗
	VRS−CZ1JD102J	AA	DD		C	Resistor(1/16W 1KΩ ±5%) [R597,R598,R599,R600,R601] 抵抗
	VRS−CZ1JD102J	AA	DD		C	Resistor(1/16W 1KΩ ±5%) [R605,R614,R616] 抵抗
70	VRS−CZ1JD103J	AA	DD		C	Resistor(1/16W 10KΩ ±5%) [R5,R61,R63,R71,R80] 抵抗
	VRS−CZ1JD103J	AA	DD		C	Resistor(1/16W 10KΩ ±5%) [R90,R99,R103,R108,R141] 抵抗
	VRS−CZ1JD103J	AA	DD		C	Resistor(1/16W 10KΩ ±5%) [R142,R143,R144,R161,R162] 抵抗
	VRS−CZ1JD103J	AA	DD		C	Resistor(1/16W 10KΩ ±5%) [R167,R183,R186,R192,R197] 抵抗
	VRS−CZ1JD103J	AA	DD		C	Resistor(1/16W 10KΩ ±5%) [R198,R199,R207,R211,R214] 抵抗
	VRS−CZ1JD103J	AA	DD		C	Resistor(1/16W 10KΩ ±5%) [R215,R216,R221,R226,R230] 抵抗
	VRS−CZ1JD103J	AA	DD		C	Resistor(1/16W 10KΩ ±5%) [R231,R232,R239,R240,R242] 抵抗
	VRS−CZ1JD103J	AA	DD		C	Resistor(1/16W 10KΩ ±5%) [R244,R246,R247,R249,R262] 抵抗
	VRS−CZ1JD103J	AA	DD		C	Resistor(1/16W 10KΩ ±5%) [R263,R272,R278,R282,R283] 抵抗
	VRS−CZ1JD103J	AA	DD		C	Resistor(1/16W 10KΩ ±5%) [R284,R285,R286,R288,R290] 抵抗
	VRS−CZ1JD103J	AA	DD		C	Resistor(1/16W 10KΩ ±5%) [R301,R302,R304,R305,R310] 抵抗
	VRS−CZ1JD103J	AA	DD		C	Resistor(1/16W 10KΩ ±5%) [R311,R312,R350,R351,R354] 抵抗
	VRS−CZ1JD103J	AA	DD		C	Resistor(1/16W 10KΩ ±5%) [R355,R356,R357,R359,R364] 抵抗
	VRS−CZ1JD103J	AA	DD		C	Resistor(1/16W 10KΩ ±5%) [R365,R367,R385,R390,R406] 抵抗
	VRS−CZ1JD103J	AA	DD		C	Resistor(1/16W 10KΩ ±5%) [R420,R429,R435,R438,R440] 抵抗
	VRS−CZ1JD103J	AA	DD		C	Resistor(1/16W 10KΩ ±5%) [R446,R454,R469,R470,R471] 抵抗
	VRS−CZ1JD103J	AA	DD		C	Resistor(1/16W 10KΩ ±5%) [R475,R476,R484,R495,R496] 抵抗
	VRS−CZ1JD103J	AA	DD		C	Resistor(1/16W 10KΩ ±5%) [R497,R503,R506,R509,R512] 抵抗
	VRS−CZ1JD103J	AA	DD		C	Resistor(1/16W 10KΩ ±5%) [R514,R516,R517,R519,R520] 抵抗
	VRS−CZ1JD103J	AA	DD		C	Resistor(1/16W 10KΩ ±5%) [R523,R526,R527,R530,R534] 抵抗
	VRS−CZ1JD103J	AA	DD		C	Resistor(1/16W 10KΩ ±5%) [R542,R543,R559,R561,R563,R564] 抵抗
71	VRS−CZ1JD105J	AA	DD		C	Resistor(1/16W 1.0MΩ ±5%) [R485,R539] 抵抗
73	VRS−CZ1JD152J	AA	DD		C	Resistor(1/16W 1.5KΩ ±5%) [R550] 抵抗
74	VRS−CZ1JD201J	AA	DD		C	Resistor(1/16W 200Ω ±5%) [R2,R4,R174,R293,R339] 抵抗
	VRS−CZ1JD201J	AA	DD		C	Resistor(1/16W 200Ω ±5%) [R340,R602] 抵抗
75	VRS−CZ1JD220J	AA	DD		C	Resistor(1/16W 22Ω ±5%) [R40,R69,R73,R78,R79] 抵抗
	VRS−CZ1JD220J	AA	DD		C	Resistor(1/16W 22Ω ±5%) [R81,R139,R341,R343,R360] 抵抗
	VRS−CZ1JD220J	AA	DD		C	Resistor(1/16W 22Ω ±5%) [R361,R362,R363,R378,R379] 抵抗
	VRS−CZ1JD220J	AA	DD		C	Resistor(1/16W 22Ω ±5%) [R393,R394,R401,R402,R408] 抵抗
	VRS−CZ1JD220J	AA	DD		C	Resistor(1/16W 22Ω ±5%) [R426,R427,R428,R449,R451] 抵抗
	VRS−CZ1JD220J	AA	DD		C	Resistor(1/16W 22Ω ±5%) [R498,R544,R546,R576,R577] 抵抗
	VRS−CZ1JD220J	AA	DD		C	Resistor(1/16W 22Ω ±5%) [R578,R579,R580,R581,R582] 抵抗
	VRS−CZ1JD220J	AA	DD		C	Resistor(1/16W 22Ω ±5%) [R583,R584,R585,R586,R587] 抵抗
	VRS−CZ1JD220J	AA	DD		C	Resistor(1/16W 22Ω ±5%) [R588,R589,R590,R591,R592] 抵抗
76	VRS−CZ1JD330J	AA	DD		C	Resistor(1/16W 33Ω ±5%) [R89,R91,R92,R95,R96] 抵抗
	VRS−CZ1JD330J	AA	DD		C	Resistor(1/16W 33Ω ±5%) [R97,R98,R104,R110,R111] 抵抗
	VRS−CZ1JD330J	AA	DD		C	Resistor(1/16W 33Ω ±5%) [R125,R136,R137,R138,R140] 抵抗
	VRS−CZ1JD330J	AA	DD		C	Resistor(1/16W 33Ω ±5%) [R202,R205,R419,R425,R536] 抵抗
	VRS−CZ1JD330J	AA	DD		C	Resistor(1/16W 33Ω ±5%) [R624,R625,R626,R628,R629] 抵抗
	VRS−CZ1JD330J	AA	DD		C	Resistor(1/16W 33Ω ±5%) [R630,R631,R632,R633] 抵抗
77	VRS−CZ1JD332J	AA	DD		C	Resistor(1/16W 3.3KΩ ±5%) [R547] 抵抗
78	VRS−CZ1JD470J	AA	DD		C	Resistor(1/16W 47Ω ±5%) [R472,R473,R483,R487,R488] 抵抗
	VRS−CZ1JD470J	AA	DD		C	Resistor(1/16W 47Ω ±5%) [R500,R510,R538,R627] 抵抗
79	VRS−CZ1JD823J	AA	DD		C	Resistor(1/16W 82KΩ ±5%)(MCR01MZSJ823) [R466] 抵抗
80	VSDTC114EK/−1	AB	DD		B	Transistor(DTC114EK) [Q5] ﾄﾗﾝｼﾞｽﾀｰ
81	VSDTC114YK/−1	AC	ZZ		B	Transistor(DTC114YK) [Q1,Q3,Q4,Q13] ﾄﾗﾝｼﾞｽﾀｰ
82	XBBSD30P06000	AA	DD		C	Screw(3×6) [IC12] ﾋﾞｽ
	(Unit)					
901	CPWBN1518DS55	EB	**		E	PRTC PWB PRTC 基板

■ 索引 (Index)

PARTS CODE	JAPAN ONLY ORDER CODE	NO.	PRICE R. Ex.	PRICE R. Ja.	NEW	P/R
【C】						
CARMM0286FC01	572 240 0472	21- 18	AG	DX	N	C
CARMP0147DS51	572 240 0445	3- 14	BA	FX		E
CBDGD0043FC01	572 150 0033	1- 20	AQ	EQ	N	C
CBDGD0043FC02	572 150 0034	1- 20	AP	EQ	N	C
CBDGD0043FC03	572 150 0035	1- 20	AQ	EQ	N	C
CBDGD0043FC04	572 150 0031	1- 20	AR	EQ	N	C
CBDGD0043FC05	572 150 0032	1- 20	AQ	EQ	N	C
CBTN-0252FC01	572 170 0507	4- 12	AP	EQ		D
CBTN-0253FC01	572 170 0508	4- 11	AN	EG		D
CBTN-0256FC02	572 170 0511	4- 23	AR	EQ	N	D
CBTN-0256FC03	572 170 0512	4- 24	AN	EG	N	D
CBTN-0260FC01	572 170 0513	4- 20	AE	DX	N	D
CBTN-0261FC01	572 170 0514	4- 21	AK	DJ	N	D
CCADZ1518FC01	572 913 0954	36- 10	AB	DJ		D
CCADZ1561FC01	572 913 0986	36- 10	AK	DX		D
CCASP0173FC15	572 108 1287	10-901	BG	GT		E
CCASP0173FC16	572 108 1288	10-901	BG	GT		E
CCASP0173FC17	572 108 1284	10-901	BF	GN		E
CCASZ0298DS52	572 108 1316	20-501	BK	HG	N	A
CCASZ0302DS51	572 108 1312	22- 4	BB	GD	N	A
CCÖVH0212FC34	572 110 1296	5-901	BN	HV	N	D
CDAiU0577FC31	572 210 1041	31- 40	BE	GN		E
CDAiU0618FC02	572 210 1218	6- 25	BN	HV	N	C
〃	572 210 1218	7- 24	BN	HV	N	C
CDAiU0619DS53	572 210 1217	7- 6	BR	LX	N	E
〃	572 210 1217	8-901	BR	LX	N	E
CDSKA0002QS33	578 966 0079	36- 10	AP	EQ	N	D
CDSKA0002TS33		36- 10	*	*	N	D
CDSKA0014FC31		36- 10	AT	EZ	N	D
CDSKA0014FC32		36- 10	AT	EZ	N	D
CDSKA0014FC35		36- 10	AT	EZ	N	D
CDSKA0014GH35		36- 10	*	*	N	D
CFiX-0571FC01	572 211 0755	2- 2	AY	FQ	N	D
CFiX-0571FC02	572 211 0782	2- 2	AN	EQ	N	D
CFiX-0571FC03	572 211 0783	2- 2	AN	EQ	N	D
CFRM-1061DS71	572 213 2223	23- 12	AV	FG	N	E
CFRM-1063DS51	572 213 2224	12-901	BF	GN	N	E
CFRM-1063FC01	572 213 2230	12- 1	AU	EZ	N	C
CFRM-1066FC01	572 213 2231	21- 21	AQ	EQ	N	C
CFRM-1066FC02	572 213 2232	21- 6	AK	EB	N	C
CFRM-1070FC01	572 213 2233	24- 32	AP	EQ	N	C
CFRM-1071FC01	572 213 2234	25- 23	AL	EB	N	C
CFRM-1072FC01	572 213 2235	25- 25	AL	EB	N	C
CFRM-1075FC01	572 213 2236	15- 12	AN	EG	N	C
CFRM-1076DS51	572 213 2225	18-901	BD	GN	N	C
CFRM-1081DS51	572 213 2226	11-901	BK	HG	N	E
CFRM-1081FC01	572 213 2237	11- 23	AU	FG	N	C
CFRM-1083DS51	572 213 2249	22-901	BK	HC	N	E
CFRM-1083DS52	572 213 2227	22-901	BH	HC	N	E
CFRM-1083DS72	572 213 2248	22- 10	AQ	EQ	N	E
CFRM-1084DS51	572 213 2228	22- 2	AR	EQ	N	E
CGiDM1977DS51	572 345 3902	16-901	BA	FX	N	E
CGiDM1977DS52	572 345 3938	16-901	BC	GJ	N	E
CGiDM1977DS53	572 345 3986	16-901	BE	GN	N	E
CGLSP0104DS51	572 348 0157	2- 13	AT	EZ	N	E
CHLDZ1446FC32	572 214 2328	7- 2	BH	HC	N	E
CPAKA6340FC01	572 902 1717	36- 5	AW	FG	N	D
CPLTM5788FCE4	572 221 8193	37-501	BS	MW	N	E
CPLTM5974FC01	572 221 8202	29- 16	AH	DX	N	C
CPLTM5975FC01	572 221 8203	29- 17	AL	EB	N	C
CPLTM5983FC01	572 221 8134	12- 6	AL	EB	N	C
CPLTM5995DS51	572 221 8125	6- 1	CA	TV	N	E
CPLTM5997FC01	572 221 8135	25- 17	AL	EB	N	C
CPLTM5999FC01	572 221 8136	26- 1	AL	EB	N	C
CPLTM6000FC01	572 221 8137	26- 8	AK	EB	N	C
CPLTM6011FC02	572 221 8138	20- 39	AS	EQ	N	C
CPLTM6017FC01	572 221 8139	28- 3	AG	DX	N	C
CPLTM6024DS51	572 221 8126	31- 15	AU	EZ	N	E
CPLTM6071FC01	572 221 8140	14- 13	AK	DX	N	C
CPLTM6109DS51	572 221 8194	24- 52	AP	EQ		E
CPNLC0248FC01	572 158 0779	4- 16	AU	FG	N	D
CPNLC0248FC02	572 158 0782	4- 16	AV	FG	N	D
CPNLC0248FC03	572 158 0780	4- 16	AU	GN	N	D
CPWBF0083RS51	578 684 0931	18- 18	AU	EZ		E
CPWBF0106RS51	572 684 4048	13- 15	AP	EQ		E
CPWBF1453FCE1	572 684 3826	3- 7	AX	FG		E
CPWBF1454FCE1	572 684 3827	7- 29	BN	LE		E
CPWBF1523FC32	572 684 4034	8- 14	BF	GN	N	E
CPWBF1525FCE1	572 684 4035	4- 3	BD	GJ	N	E
〃	572 684 4035	54-901	BD	GJ	N	E
CPWBF1526DS51	572 684 4016	23- 27	AP	EQ	N	C
CPWBF1529DS51	572 684 4017	20- 4	AR	EQ	N	E
CPWBF1546FCE1	572 684 4036	31- 6	BB	GD	N	E
CPWBF1546FCE2	572 684 4078	31- 6	BA	FX	N	E
CPWBF1546FCE4	572 684 4079	31- 6	BA	FX	N	E
CPWBF1561DS51		31- 58	AZ	FQ	N	E
CPWBN1472FCE4	572 684 4049	37- 36	CG	UM	N	E
〃	572 684 4049	49-901	CG	UM	N	E
CPWBN1491FCE1	572 684 3845	37- 34	CA	TV		E
〃	572 684 3845	50-901	CA	TV		E
CPWBN1518DS55	572 684 4042	38- 16	EB	ZZ	N	E
〃	572 684 4042	58-901	EB	ZZ	N	E
CPWBN1519DS52	572 684 4039	52-901	CX	**	N	E
〃	572 684 4039	6- 22	CX	**	N	E
CPWBN1521DS51	572 684 4043	38- 12	BM	HR	N	E
CPWBN1534DS52	572 684 4044	38- 9	BP	LP	N	E
CPWBN1544DS51	572 684 4040	31- 28	BR	LX	N	E
〃	572 684 4040	51-901	BR	LX	N	E
CPWBN1545FCE1	572 684 4037	31- 8	BQ	LP	N	E
〃	572 684 4037	55-901	BQ	LP	N	E
CPWBN1549DS54	572 684 4041	34- 1	CU	VW	N	E
〃	572 684 4041	53-901	CU	VW	N	E
CPWBN1549DS55	572 684 4045	34- 1	CV	VZ	N	E
〃	572 684 4045	53-901	CV	VZ	N	E
CPWBN1549DS57	572 684 4059	34- 1	CU	VW	N	E
〃	572 684 4059	53-901	CU	VW	N	E
CPWBN1560FCE1	572 684 4038	4- 5	BM	HR	N	E
〃	572 684 4038	56-901	BM	HR	N	E
CRÖLM1390FC01	572 287 2390	19- 17	AW	FG	N	B
CRÖLM1404DS51	572 287 2374	19- 32	BB	GD	N	E
CSFTZ2553FC01	572 290 2487	10- 29	AN	EG		C
CSFTZ2686DS51	572 290 2894	23- 21	AV	FG	N	E
CSFTZ2694FC31	572 290 2900	7- 17	BA	FX	N	E
CSFTZ2698DS51	572 290 2895	14- 32	AQ	EQ	N	E
CSFTZ2702DS51	572 290 2896	15- 33	AP	EQ	N	E
CSFTZ2706DS51	572 290 2897	17- 41	AP	EQ	N	C
CSFTZ2716DS51	572 290 2898	22- 16	AP	EQ	N	C
CSTYM0294FC01	572 231 0594	27- 9	AS	EQ	N	C
CTHM-0011FC01	578 644 0001	24- 27	AK	EB		B
【D】						
DHAi-3193FC11	572 542 2266	4- 27	AC	DJ	N	C
DHAi-3204FC11	572 542 2267	37- 26	AM	EG	N	C
DHAi-3206FC11	572 542 2269	37- 39	AG	DX	N	C
DHAi-3207FC11	572 542 2270	37- 25	AG	DX	N	C
DHAi-3332DS11	572 542 2026	36- 11	BB	GD	N	B
DHAi-3332DSZZ	572 542 2025	36- 11	BB	GD	N	B
DHAi-3339FC11	572 542 2326	11- 2	AV	FG	N	C
DHAi-3341FCZZ	572 542 2272	17- 4	AH	DX	N	C
DHAi-3342FCZZ	572 542 2273	18- 13	AE	DS	N	C
DHAi-3344FCZZ	572 542 2274	21- 26	AF	DS	N	C
DHAi-3345FC11	572 542 2275	35- 6	AY	FQ	N	C
DHAi-3348FCZZ	572 542 2276	35- 14	AR	EQ	N	C
DHAi-3349FCZZ	572 542 2277	23- 2	AD	DJ	N	C
DHAi-3350FC11	572 542 2327	20- 26	AV	FG	N	C
DHAi-3351FCZZ	572 542 2279	23- 1	AD	DJ	N	C
DHAi-3353FCZZ	572 542 2280	24- 13	AY	FQ	N	C
DHAi-3354FC11	572 542 2328	25- 41	AH	DX	N	C
DHAi-3359FC11	572 542 2329	13- 9	AQ	EQ	N	C
DHAi-3360FCZZ	572 542 2283	35- 13	AU	EZ	N	C
DHAi-3361FCZZ	572 542 2284	35- 7	AT	EZ	N	C
DHAi-3362FCZZ	572 542 2285	31- 17	AY	FQ	N	C
DHAi-3363FCZZ	572 542 2286	35- 16	AT	EZ	N	C
DHAi-3364FCZZ	572 542 2287	33- 6	AX	FG	N	C
DHAi-3365FCZZ	572 542 2288	23- 4	AH	DX	N	C
DHAi-3367FCZZ	572 542 2289	32- 17	AT	EZ	N	C
DHAi-3369FCZZ	572 542 2290	6- 3	AN	EG	N	C
DHAi-3399FCZZ	572 542 2291	24- 13	AY	FQ	N	C
DHAi-3400FCZZ	572 542 2324	35- 7	AU	EZ	N	C
DHAi-3402FC11		33- 6	AY	FQ	N	C
DHAi-3404FCZZ	572 542 2294	35- 10	AR	EQ	N	C
DHAi-3405FCZZ	572 542 2295	35- 11	AG	DX	N	C
DHAi-3410FCZZ	572 542 2298	35- 12	AL	EB	N	C
DHAi-3412FCZZ	572 542 2300	31- 27	AC	DJ	N	C
DHAi-3413FCZZ	572 542 2301	35- 5	AN	EG	N	C
DHAi-3414FC11	572 542 2331	20- 3	AL	EB	N	C
DHAi-3416FCZZ	572 542 2303	35- 9	AN	EQ	N	C
DHAi-3419FCZZ	572 542 2304	35- 2	AE	DS	N	C
〃	572 542 2304	4- 29	AE	DS	N	C
DHAi-3424FC12	572 542 2417	35- 1	AV	FG	N	C

PARTS CODE	JAPAN ONLY ORDER CODE	NO.	PRICE R. Ex.	PRICE R. Ja.	NEW	P/R
DHAi-3426FCZZ	572 542 2306	31- 52	AQ	EG	N	C
〃	572 542 2306	35- 20	AQ	EG	N	C
DHAi-3441FCZZ	572 542 2307	37- 5	AV	FG	N	C
DHAi-3443FC12	572 542 2325	35- 8	AY	FQ	N	C
DHAi-3453FCZZ		38- 8	AV	FG	N	C
DHAi-3454FCZZ		38- 7	AK	DX	N	C
DHAi-3465FCZZ	572 542 2309	34- 21	AV	FG	N	C
DUNT-7136FCA1	572 685 2220	37- 31	AN	EQ	N	E
DUNT-7187DS11	572 685 2242	13-901	BW	RJ	N	E
〃	572 685 2242	14-901	BW	RJ	N	E
〃	572 685 2242	15-901	BW	RJ	N	E
DUNT-7187DSZZ	572 685 2181	13-901	BV	RB	N	E
〃	572 685 2181	14-901	BV	RB	N	E
〃	572 685 2181	15-901	BV	RB	N	E
DUNT-7188DS11		19-901	CE	UF	N	A
〃		20-901	CE	UF	N	A
DUNT-7188DS12		19-901	CE	UF	N	A
〃		20-901	CE	UF	N	A
DUNT-7193DSZZ	572 685 2183	28-901	BG	GX	N	E
DUNT-7248DSZZ	572 685 2184	6-901	CM	UW	N	E
〃	572 685 2184	7-901	CM	UW	N	E
DUNT-7251DSZZ	572 685 2185	23-901	BZ	TF	N	E
DUNT-7255DSZZ	572 685 2186	36- 9	AZ	FQ	N	E
DUNT-7269FCZZ	572 685 2227	38- 5	CD	UD		E
DUNT-7272DSZZ	572 685 2187	30- 28	CU	VZ	N	E
DUNT-7289DSZZ	572 685 2222	31- 24	AK	DX	N	E
DUNTW7189DS11	572 685 2223	24-901	CG	UM	N	E
〃	572 685 2223	25-901	CG	UM	N	E
DUNTW7189DS12	572 685 2234	24-901	CG	UM	N	E
〃	572 685 2234	25-901	CG	UM	N	E
DUNTW7189DSZZ	572 685 2188	24-901	CG	UM	N	E
〃	572 685 2188	25-901	CG	UM	N	E
【G】						
GCAB-0946FCZ2	572 107 2065	37- 27	AZ	FQ		D
GCAB-0947FCZZ	572 107 2053	37- 2	AT	EZ		D
GCAB-0980FCZ5	572 107 2138	1- 18	BA	FX	N	D
GCAB-0981FCZ5	572 107 2139	27- 28	AZ	FX	N	D
GCAB-0981FCZZ	572 107 2179	27- 28	BB	GD	N	D
GCAB-0982FCZ5	572 107 2140	2- 19	AU	FG	N	D
GCAB-0982FCZZ	572 107 2168	2- 19	AS	EQ	N	D
GCAB-0983FCZ5	572 107 2141	16- 11	AQ	EQ	N	C
GCAB-0983FCZZ	572 107 2169	16- 11	AS	EQ	N	C
GCAB-0984FCZ5	572 107 2142	1- 21	BM	HR	N	D
GCAB-0984FCZZ	572 107 2170	1- 21	BA	FX	N	D
GCAB-0985FCZ5	572 107 2143	1- 19	AP	EQ	N	D
GCAB-0985FCZZ	572 107 2171	1- 19	AQ	EQ	N	D
GCAB-0987FCZ5	572 107 2144	1- 6	AV	FG	N	D
GCAB-0987FCZZ	572 107 2180	1- 6	AU	EZ	N	D
GCAB-0988FCZ5	572 107 2145	1- 3	BC	GJ	N	D
GCAB-0988FCZZ	572 107 2172	1- 3	BE	GN	N	D
GCAB-0989FCZ5	572 107 2146	1- 16	AT	EZ	N	D
GCAB-0989FCZZ	572 107 2181	1- 16	AR	EQ	N	D
GCAB-0990FCZ5	572 107 2147	1- 15	AM	EG	N	D
GCAB-0990FCZZ	572 107 2182	1- 15	AP	EQ	N	D
GCAB-0991FCZ5	572 107 2148	1- 13	AS	EQ	N	D
GCAB-0991FCZZ	572 107 2183	1- 13	AR	EQ	N	D
GCAB-0992FCZ5	572 107 2149	1- 10	AT	EZ	N	D
GCAB-0992FCZZ	572 107 2184	1- 10	AV	FG	N	D
GCAB-0993FCZZ	572 107 2150	1- 8	BA	FX	N	D
GCAB-0994FCZ5	572 107 2151	2- 5	BA	FX	N	D
GCAB-0994FCZZ	572 107 2173	2- 5	AR	EQ	N	D
GCAB-0995FCZ5	572 107 2152	2- 1	AQ	EQ	N	D
GCAB-0995FCZZ	572 107 2185	2- 1	AR	EQ	N	D
GCAB-0996FCZ5	572 107 2153	2- 6	AW	FG	N	D
〃	572 107 2153	3- 12	AW	FG	N	D
GCAB-0996FCZZ	572 107 2186	2- 6	AW	FG	N	D
〃	572 107 2186	3- 12	AW	FG	N	D
GCAB-0997FCZ5	572 107 2154	2- 7	AP	EQ	N	D
GCAB-0997FCZZ	572 107 2187	2- 7	AQ	EQ	N	D
GCAB-0998FCZ5	572 107 2155	2- 3	AP	EQ	N	D
GCAB-0998FCZZ	572 107 2174	2- 3	AG	DX	N	D
GCAB-0999FCZ5	572 107 2156	2- 9	AG	DX	N	D
GCAB-0999FCZZ	572 107 2175	2- 9	AH	DX	N	D
GCAB-1018FCZ5	572 107 2157	1- 1	BF	FG	N	D
GCAB-1018FCZZ	572 107 2176	1- 1	AY	FQ	N	D
GCAB-1019FCZ5	572 107 2158	2- 15	AV	FQ	N	D
GCAB-1019FCZZ	572 107 2188	2- 15	AU	EZ	N	D
GCAB-1020FCZ5	572 107 2159	2- 17	AL	DX	N	D
GCAB-1020FCZZ	572 107 2189	2- 17	AH	DX	N	D
GCAB-1022FCZ5	572 107 2160	2- 16	AQ	EZ	N	D
GCAB-1022FCZZ	572 107 2190	2- 16	AU	EZ	N	D

PARTS CODE	JAPAN ONLY ORDER CODE	NO.	PRICE R. Ex.	PRICE R. Ja.	NEW	P/R
GCAB-1023FCZ5	572 107 2161	2- 11	BC	EQ	N	D
GCAB-1023FCZZ	572 107 2177	2- 11	AT	EZ	N	D
GCAB-1024FCZ5	572 107 2162	2- 20	AU	FQ	N	D
GCAB-1024FCZZ	572 107 2191	2- 20	AX	FG	N	D
GCAB-1025FCZ5	572 107 2163	2- 18	AZ	EQ	N	D
GCAB-1025FCZZ	572 107 2178	2- 18	AR	EQ	N	D
GCASP0173FCZ2	572 108 1303	10- 39	BA	FX		C
GCÕVH0211FCZ2	572 110 1305	5- 11	BB	GD	N	D
GCÕVH0212FCZ2	572 110 1306	5- 5	BB	GD	N	D
GCÕVZ0237FCZZ	572 110 1309	36-106	AZ	FQ	N	D
GLEGG0075FCZZ	572 123 0106	30- 14	AE	DJ		C
【H】						
HPNLC0247FCZ5	572 158 0781	4- 13	BD	GN	N	C
HPNLC0247FCZZ	572 158 0783	4- 13	AV	FG	N	C
HPNLH0249FCZZ	572 158 0758	4- 10	BF	GN		C
【J】						
JHNDM0163FCZ1	572 172 0223	29- 2	AG	DX	N	C
JHNDP0164FCZ3	572 172 0220	10- 1	BL	HL	N	D
JHNDP0167FCZ2	572 172 0224	22- 24	AC	DJ	N	C
JKNBZ0143FCZZ	572 174 0376	25- 6	AD	DJ	N	C
JKNBZ0144FCZZ	572 174 0377	27- 10	AE	DS	N	C
【L】						
LANGF1421FCZZ	572 200 1463	29- 7	AF	DS	N	C
LANGF1422FCZZ	572 200 1464	29- 6	AG	DS	N	C
LANGF1423FCZZ	572 200 1465	6- 19	AH	DX	N	C
LANGT1411FCZZ	572 200 1466	23- 11	AD	DJ	N	C
LBNDJ0002FCZZ	572 201 0032	6- 33	AA	DD		C
LBNDJ0016FCZZ	572 201 0010	38- 11	AA	DD		C
LBNDJ0043FCZ1	572 201 0125	12- 25	AA	DJ		C
〃	572 201 0125	35- 19	AA	DJ		C
〃	572 201 0125	7- 23	AA	DJ		C
LBNDZ0069FCZZ	572 201 0158	1- 23	AD	DJ		C
LBÕSZ2114FCZZ	572 202 0455	30- 16	AK	EB	N	C
LBSHC0355FCZZ	572 204 0502	6- 9	AF	DS	N	C
LBSHC0356FCZZ	572 204 0503	7- 11	AC	DJ	N	C
LBSHZ1001ACZZ	596 204 0015	37- 12	AB	DD		C
LBSHZ1102CCZZ	596 204 0010	3- 9	AC	DD		C
LBSHZ2050SCZZ	595 204 0016	37- 16	AB	DD		C
LDAiU0576FCZZ	572 210 1046	10- 25	AG	DX		C
LDAiU0610FCZZ	572 210 1124	7- 9	AE	DS		C
LDAiU0619FCZ1	572 210 1199	8- 5	AS	EQ		C
LDAiU0639FCZZ	572 210 1219	32- 8	AE	DS	N	C
LDAiU0643FCZZ	572 210 1220	31- 2	AH	DX	N	C
LDAiU0646FCZ5	572 210 1221	4- 1	BF	GN	N	C
LDAiU0646FCZZ	572 210 1229	4- 1	AX	FG	N	C
LDAiU0656FCZZ	572 210 1222	20- 43	AF	DS	N	C
LFiX-0524FCZZ	572 211 0716	17- 27	AC	DJ		C
LFiX-0537FCZZ	572 211 0713	7- 10	AD	DJ		C
LFiX-0545FCZZ	572 211 0738	8- 16	AC	DJ		C
LFiX-0560FCZZ	572 211 0739	37- 23	AF	DS		C
LFiX-0567FCZZ	572 211 0740	37- 4	AD	DJ		C
LFiX-0572FCZ5	572 211 0756	2- 4	AS	EQ	N	D
LFiX-0572FCZZ	572 211 0759	2- 4	AK	DX	N	D
LFRM-1062FCZZ	572 213 2238	23- 5	AP	EQ	N	C
LFRM-1064FCZ1	572 213 2269	19- 10	AS	EZ	N	C
LFRM-1069FCZZ	572 213 2240	24- 21	AL	EB	N	C
LFRM-1073FCZ1	572 213 2257	27- 22	AS	EG	N	C
LFRM-1074FCZZ	572 213 2242	27- 23	AS	EQ	N	C
LFRM-1076FCZZ	572 213 2243	18- 16	AN	EG	N	C
LFRM-1079FCZZ	572 213 2244	27- 13	AF	DS	N	C
LFRM-1080FCZZ	572 213 2245	27- 14	AH	DX	N	C
LHLDR1511FCZ1	572 214 2329	24- 8	BA	FX	N	C
LHLDW0429FCZZ	572 214 0398	34- 16	AB	DD		C
LHLDW0595FCZZ	572 214 0467	9- 13	AC	DD		C
LHLDW1006FCZZ	578 214 0007	34- 15	AA	DD		C
LHLDW1061FCZZ	572 214 0597	23- 30	AB	DD		C
LHLDW1151FCZZ	572 214 1300	31- 22	AB	DJ		C
LHLDW1152FCZZ	572 214 1345	30- 4	AC	DJ		C
〃	572 214 1345	31- 23	AC	DJ		C
LHLDW1154FCZZ	572 214 1321	31- 34	AC	DJ		C
LHLDW1155FCZZ	572 214 1336	23- 8	AC	DJ		C
LHLDW1223FCZZ	572 214 1441	35- 17	AA	DJ		C
LHLDW1226FCZZ	572 214 1450	10- 40	AB	DJ		C
〃	572 214 1450	36- 25	AB	DJ		C
LHLDW1499FCZZ	572 214 2204	37- 19	AC	DJ		C
LHLDW1545FCZZ	572 214 2326	35- 18	AB	DJ	N	C
LHLDW2087SCZZ	595 214 0101	37- 41	AA	DD	N	C
LHLDW5031BCZZ	588 214 0029	6- 34	AA	DD		C
LHLDZ1085FCZ2	572 214 2205	3- 8	AD	DJ		C
LHLDZ1377FCZZ	572 214 1795	10- 36	AD	DJ		C
LHLDZ1381FCZZ	572 214 1799	7- 31	AL	EB		C

PARTS CODE	JAPAN ONLY ORDER CODE	NO.	PRICE R. Ex.	PRICE R. Ja.	NEW	P/R
LHLDZ1399FCZZ	572 214 1949	25- 30	AC	DJ		C
LHLDZ1458FCZZ	572 214 2206	4- 9	AF	DS		C
LHLDZ1459FCZZ	572 214 2207	4- 6	AE	DS		C
LHLDZ1493FCZZ	572 214 2211	37- 6	AF	DS		C
LHLDZ1494FCZZ	572 214 2212	37- 3	AF	DS		C
LHLDZ1505FCZZ	572 214 2213	7- 4	AC	DJ		C
LHLDZ1508FCZZ	572 214 2330	33- 1	AW	FG	N	C
LHLDZ1509FCZZ	572 214 2331	19- 26	AF	DS	N	C
LHLDZ1512FCZZ	572 214 2332	24- 36	AR	EQ	N	C
LHLDZ1513FCZZ	572 214 2333	24- 22	AD	DJ	N	C
LHLDZ1514FCZZ	572 214 2334	16- 16	AK	DX	N	C
LHLDZ1517FCZZ	572 214 2335	11- 27	AE	DS	N	C
LHLDZ1519FCZZ	572 214 2336	20- 33	AW	FG	N	C
LHLDZ1520FCZZ	572 214 2337	15- 30	AC	DJ	N	C
LHLDZ1521FCZZ	572 214 2338	13- 20	AE	DJ	N	C
LHLDZ1523FCZZ	572 214 2339	13- 27	AH	DX	N	C
LHLDZ1524FCZZ	572 214 2340	13- 1	AK	DX	N	C
LHLDZ1525FCZZ	572 214 2341	31- 4	AG	DJ	N	C
LHLDZ1539FCZZ	572 214 2343	19- 29	AD	DJ	N	C
LHLDZ1546FCZZ	572 214 2327	29- 22	AC	DJ	N	C
LHLDZ1547FCZZ	572 214 2344	1- 30	AD	DJ	N	C
〃	572 214 2344	38- 26	AD	DJ	N	C
LPiN-0277FCZZ	572 218 0350	1- 26	AB	DJ		C
LPiNS0014QSBZ	572 218 0635	4- 18	AF	DS	N	C
LPiNS0014QSCZ	572 218 0636	4- 17	AF	DS	N	C
LPiNS0096FCZZ	572 218 0079	17- 12	AB	DD		C
〃	572 218 0079	18- 7	AB	DD		C
〃	572 218 0079	21- 5	AB	DD		C
〃	572 218 0079	23- 19	AB	DD		C
〃	572 218 0079	27- 32	AB	DD		C
LPiNS0133FCZZ	572 218 0086	12- 4	AA	DD		C
〃	572 218 0086	15- 15	AA	DD		C
〃	572 218 0086	25- 4	AA	DD		C
LPiNS0155FCZZ	572 218 0052	15- 6	AA	DD		C
〃	572 218 0052	16- 35	AA	DD		C
〃	572 218 0052	17- 13	AA	DD		C
LPiNS0165FCZZ	572 218 0087	28- 28	AB	DD		C
LPiNS0258FCZZ	572 218 0329	28- 21	AA	DD		C
LPiNS0280FCZZ	572 218 0367	5- 9	AD	DJ		C
LPiNS0320FCZZ	572 218 0546	27- 35	AB	DJ		C
LPiNS0327FCZZ	572 218 0605	27- 34	AC	DJ		C
LPiNS7062SCZZ	577 218 0001	10- 9	AA	DD		C
LPLTM2573FCZ1	572 221 2384	4- 14	AD	DJ		C
LPLTM5027FCZZ	572 221 5629	1- 22	AC	DJ		C
LPLTM5414FCZ1	572 221 7959	10- 6	AR	EQ		C
LPLTM5416FCZZ	572 221 6712	10- 34	AH	DX		C
LPLTM5714FCZZ	572 221 7735	19- 38	AB	DJ		C
〃	572 221 7735	22- 7	AB	DJ		C
LPLTM5787FCZZ	572 221 7890	37- 35	AQ	EQ		C
LPLTM5788FCZZ	572 221 7891	37- 14	AP	EQ		C
LPLTM5789FCZZ	572 221 7892	37- 30	AF	DS		C
LPLTM5892FCZZ	572 221 7898	37- 22	AD	DJ		C
LPLTM5973FCZZ	572 221 8141	33- 16	AQ	EQ	N	C
LPLTM5976FCZZ	572 221 8144	32- 14	AL	EB	N	C
LPLTM5977FCZZ	572 221 8206	38- 17	AS	EQ	N	C
LPLTM5979FCZZ	572 221 8145	31- 33	AV	FG	N	C
LPLTM5980FCZZ	572 221 8146	31- 21	AK	EB	N	C
LPLTM5981FCZZ	572 221 8147	31- 29	AK	DX	N	C
LPLTM5986FCZZ	572 221 8148	19- 14	AD	DJ	N	C
LPLTM5987FCZZ	572 221 8149	20- 9	AG	DX	N	C
LPLTM5989FCZZ	572 221 8150	6- 13	AQ	EQ	N	C
LPLTM5991FCZZ	572 221 8151	6- 23	AW	FG	N	C
LPLTM5992FCZZ	572 221 8152	7- 22	AK	DX	N	C
LPLTM5996FCZ1	572 221 8153	24- 26	AN	EG	N	C
LPLTM6003FCZZ	572 221 8154	23- 24	AD	DJ	N	C
LPLTM6016FCZZ	572 221 8155	28- 12	AC	DJ	N	C
LPLTM6025FCZZ	572 221 8156	34- 3	AE	DS	N	C
LPLTM6027FCZZ	572 221 8157	31- 7	AH	DX	N	C
LPLTM6028FCZZ		38- 6	AL	EB	N	C
LPLTM6073FCZZ	572 221 8158	28- 32	AC	DJ	N	C
LPLTM6075FCZ1	572 221 8159	37- 28	AS	EQ	N	C
LPLTM6079FCZZ	572 221 8160	31- 20	AD	DJ	N	C
LPLTM6082FCZZ	572 221 8161	9- 10	AT	EZ	N	C
LPLTM6083FCZZ	572 221 8162	9- 7	AV	FG	N	C
LPLTM6084FCZZ	572 221 8163	9- 2	AK	EB	N	C
LPLTM6085FCZZ	572 221 8164	9- 9	AN	EG	N	C
LPLTM6086FCZZ	572 221 8165	9- 12	AK	DX	N	C
LPLTM6087FCZZ	572 221 8166	9- 3	AN	EG	N	C
LPLTM6089FCZZ	572 221 8167	30- 10	AK	DX	N	C
LPLTM6090FCZZ	572 221 8168	34- 13	AE	DJ	N	C
LPLTM6092FCZ1	572 221 8169	1- 9	AM	EG	N	C

PARTS CODE	JAPAN ONLY ORDER CODE	NO.	PRICE R. Ex.	PRICE R. Ja.	NEW	P/R
LPLTM6093FCZZ	572 221 8170	29- 5	AM	EG	N	C
LPLTM6095FCZZ	572 221 8171	9- 5	AC	DJ	N	C
LPLTM6096FCZZ	572 221 8172	6- 17	AF	DS	N	C
LPLTM6097FCZZ	572 221 8173	29- 8	AD	DJ	N	C
LPLTM6100FCZZ	572 221 8174	29- 4	AM	EG	N	C
LPLTM6102FCZ1	572 221 8175	31- 45	AN	EG	N	C
LPLTM6108FCZZ	572 221 8176	37- 29	AF	DS	N	C
LPLTM6109FCZZ	572 221 8195	24- 43	AD	DJ	N	C
LPLTM6112FCZZ	572 221 8196	22- 27	AH	DX	N	C
LPLTP5411FCZZ	572 221 6755	10- 13	AQ	EQ		C
LPLTP5412FCZZ	572 221 6756	10- 5	AP	EQ		C
LPLTP5413FCZZ	572 221 6757	10- 18	AF	DS		C
LPLTP5998FCZZ	572 221 8177	25- 10	BB	GD	N	C
LPLTP6019FCZZ	572 221 8178	16- 6	AD	DJ	N	C
LPLTP6020FCZZ	572 221 8179	13- 14	AF	DS	N	C
LPLTP6098FCZZ	572 221 8180	21- 3	AD	DJ	N	C
LRALM0183FCZZ	572 223 0285	7- 36	AG	DX		C
LRALM0184FCZZ	572 223 0286	7- 35	AG	DX		C
LRALM0201FCZZ	572 223 0299	6- 26	AN	EG	N	C
LRALM0202FCZZ	572 223 0300	29- 19	AN	EG	N	C
LSŌU-0026QSCZ	572 226 0696	13- 4	BA	FX	N	C
LSŌU-0189FCZ5	572 226 0697	13- 21	AT	EZ	N	C
LSŌU-0189FCZZ	572 226 0700	13- 21	AU	EZ	N	C
LSŌU-0190FCZ5	572 226 0698	13- 10	AV	FG	N	C
LSŌU-0190FCZZ	572 226 0701	13- 10	AT	EZ	N	C
LSŌU-0193FCZ5	572 226 0699	13- 8	AN	EQ	N	C
LSŌU-0193FCZZ	572 226 0710	13- 8	AP	EQ	N	C
LSTPF0172FCZ1	572 230 0380	24- 40	AA	DJ		C
LSTPP0011QSZZ	578 230 0043	22- 21	AC	DJ		C
LSTPP0274FCZZ	572 230 0326	16- 26	AA	DD		C
〃	572 230 0326	17- 10	AA	DD		C
LSTPP0275FCZZ	572 230 0327	16- 15	AE	DS		C
LSTPP0314FCZZ	572 230 0395	10- 23	AA	DJ		C
LSTPP0366FCZZ	572 230 0537	14- 19	AD	DJ	N	C
LSTYM0261FCZZ	572 231 0527	8- 11	AB	DJ		C
LSTYM0293FCZZ	572 231 0595	21- 28	AP	EQ	N	C
LSTYM0295FCZZ	572 231 0596	15- 38	AL	EB	N	C
LSTYM0298FCZZ	572 231 0597	27- 15	AH	DX	N	C
LSTYM0301FCZZ	572 231 0598	27- 27	AF	DS	N	C
LSUPP0076FCZZ	572 233 0103	37- 20	AA	DD		C
LSUPP0118FCZZ	572 233 0143	37- 18	AB	DJ		C
LSUPP0126FCZZ	572 233 0156	31- 35	AC	DJ	N	C
〃	572 233 0156	31- 5	AC	DJ	N	C
LSUPP1001ACZZ	596 233 0001	34- 12	AB	DD		C
LX-BZ0004QSZZ	572 970 1917	7- 37	AB	DD		C
LX-BZ0036GCZZ	578 970 0190	20- 37	AC	DD		C
LX-BZ0049FCZZ	572 970 0353	7- 15	AB	DD		C
LX-BZ0071FCZZ	572 970 0435	30- 6	AA	DD		C
LX-BZ0324FCZZ	572 970 0197	7- 12	AA	DD		C
LX-BZ0531FCZZ	572 970 0220	10- 37	AA	DD		C
LX-BZ0555FCZZ	572 970 0234	36- 14	AB	DD		D
LX-BZ0736FCZZ	572 970 1499	24- 20	AB	DD		C
LX-BZ0776FCZZ	572 970 1677	2- 32	AG	DS		C
LX-BZ0833FCZZ	572 970 1816	10- 22	AC	DD		C
〃	572 970 1816	31- 47	AC	DD		C
LX-BZ0840FCZZ	572 970 1818	28- 37	AC	DD		C
LX-BZ0850FCZZ	572 970 1977	11- 7	AC	DD		C
〃	572 970 1977	33- 10	AC	DD		C
LX-BZ0855FCZZ	572 970 1980	30- 17	AC	DD		C
〃	572 970 1980	38- 19	AC	DD		C
LX-BZ0880FCZZ	572 970 1990	9- 6	AB	DD		C
LX-BZ0884FCZZ	572 970 1964	10- 8	AB	DD		C
LX-BZ0898FCZZ	572 970 2035	30- 15	AC	DD		C
LX-BZ0901FCZZ	572 970 2269	1- 32	AC	DD		C
〃	572 970 2269	38- 28	AC	DD		C
LX-BZ0916FCZZ	572 970 2273	21- 12	AA	DD		C
LX-BZ0924FCZZ	572 970 2061	25- 26	AD	DJ		C
LX-BZ0938FCZZ	572 970 2326	37- 43	AC	DD		C
LX-BZ0944FCZ1	572 970 2578	27- 11	AH	DS	N	C
LX-BZ0949FCZZ	572 970 2559	19- 13	AC	DD	N	C
LX-BZ0959FCZZ	572 970 2560	30- 9	AC	DD	N	C
LX-BZ0960FCZZ	572 970 2520	17- 22	AC	DD		C
〃	572 970 2520	30- 25	AC	DD		C
LX-BZ0962FCZ1	572 970 2566	37- 40	AF	DS	N	C
LX-BZ0963FCZZ	572 970 2579	38- 14	AF	DS	N	C
LX-BZ0965FCZZ	572 970 2581	19- 39	AE	DS	N	C
LX-BZ1022LCZZ	594 970 0327	38- 3	AB	DD		C
LX-BZ3006SC0S	541 970 5148	24- 51	AA	DD		C
〃	541 970 5148	25- 34	AA	DD		C
LX-LZ0022FCZZ	572 973 0001	31- 50	AB	DD		C
LX-NZ0088FCZZ	572 980 0102	1- 40	AC	DD		C

PARTS CODE	JAPAN ONLY ORDER CODE	NO.	PRICE R. Ex.	PRICE R. Ja.	NEW	P/R
LX-WZ0042FCZ1	572 990 0422	27- 7	AA	DD		C
LX-WZ0326FCZZ	572 990 0386	36- 16	AA	DD		D
LX-WZ0443FCZZ	572 990 0540	24- 6	AB	DD		C
〃	572 990 0540	31- 51	AB	DD		C
〃	572 990 0540	31- 53	AB	DD		C
〃	572 990 0540	33- 11	AB	DD		C
〃	572 990 0540	37- 17	AB	DD		C
LX-WZ0445FCZ1	572 990 0549	20- 61	AC	DD	N	C
〃	572 990 0549	21- 9	AC	DD	N	C
LX-WZ0448FCZZ	572 990 0547	25- 42	AB	DD	N	C
LX-WZ2011SCZZ	595 990 0031	15- 41	AA	DD		C
〃	595 990 0031	20- 45	AA	DD		C
【M】						
MARMP0147FCZ2	572 240 0446	3- 10	AK	DX		C
MARMP0148FCZ2	572 240 0447	3- 5	AK	DX		C
MARMP0293FCZ1	572 240 0473	11- 4	AL	EB	N	C
MARMP0294FCZ1	572 240 0474	14- 31	AM	EG	N	C
MARMP0295FCZZ	572 240 0475	15- 23	AF	DS	N	C
MARMP0297FCZZ	572 240 0488	16- 23	AB	DJ	N	C
MARMP0298FCZZ	572 240 0476	27- 26	AC	DJ	N	C
MARMP0301FCZ1	572 240 0471	24- 7	AE	DJ	N	C
MCAMP0106FCZZ	572 241 0146	21- 4	AC	DJ	N	C
MHNG-0170FCZ1	572 246 0256	5- 8	AE	DS		C
MHNG-0210FCZZ	572 246 0426	5- 3	AQ	EZ		C
MHNG-0211FCZZ	572 246 0427	5- 4	AQ	EZ		C
MLEVF0845FCZ1	572 248 1469	25- 32	AE	DS	N	C
MLEVF0846FCZ1	572 248 1470	25- 28	AE	DS	N	C
MLEVP0035QSE1	572 248 1225	13- 7	AC	DJ		C
MLEVP0695FCZZ	572 248 0881	11- 26	AC	DJ		C
MLEVP0754FCZZ	572 248 1063	10- 16	AF	DS		C
MLEVP0755FCZ1	572 248 1206	10- 14	AE	DJ		C
MLEVP0781FCZZ	572 248 1309	27- 16	AD	DJ		C
MLEVP0786FCZZ	572 248 1311	25- 33	AC	DD		C
MLEVP0787FCZZ	572 248 1312	25- 36	AC	DD		C
MLEVP0840FCZZ	572 248 1471	32- 13	AD	DJ	N	C
MLEVP0841FCZZ	572 248 1472	32- 7	AG	DX	N	C
MLEVP0842FCZZ	572 248 1473	23- 16	AE	DS	N	C
MLEVP0843FCZ1	572 248 1474	20- 17	AC	DJ	N	C
MLEVP0848FCZZ	572 248 1475	25- 8	AD	DJ	N	B
MLEVP0850FCZZ	572 248 1476	28- 33	AG	DX	N	C
MLEVP0851FCZZ	572 248 1477	28- 14	AE	DS	N	C
MLEVP0852FCZZ	572 248 1478	15- 24	AG	DS	N	C
MLEVP0853FCZ1	572 248 1479	16- 7	AF	DS	N	C
MLEVP0854FCZZ	572 248 1480	17- 1	AC	DJ	N	C
MLEVP0857FCZZ	572 248 1481	18- 14	AF	DJ	N	C
MLEVP0863FCZZ	572 248 1482	27- 1	AE	EB	N	C
MLEVP0864FCZZ	572 248 1483	36- 32	AD	DJ	N	C
MLEVP0865FCZZ	572 248 1484	20- 23	AC	DS	N	C
MLEVP0871FCZZ	572 248 1486	14- 20	AD	DJ	N	C
MLEVP0875FCZZ	572 248 1487	24- 5	AF	DS	N	C
MLNKP0027FCZZ	572 251 0075	14- 12	AE	DJ	N	C
MLNKP0029FCZZ	572 251 0076	15- 27	AD	DJ	N	C
MSLi-0138FCZZ	572 256 0169	8- 10	AC	DJ		C
MSLi-0140FCZZ	572 256 0186	27- 12	BA	FX	N	C
MSPRC2114FCZZ	572 258 1969	13- 22	AB	DJ		C
MSPRC2616FCZZ	572 258 2929	16- 25	AC	DJ		C
MSPRC2631FCZZ	572 258 2943	10- 15	AC	DJ		C
MSPRC2640FCZZ	572 258 2951	10- 17	AC	DJ		C
MSPRC2642FCZ1	572 258 3297	10- 26	AB	DJ		C
MSPRC2645FCZZ	572 258 2956	33- 9	AB	DJ		C
MSPRC2654FCZ1	572 258 3067	27- 8	AB	DJ		C
MSPRC2669FCZZ	572 258 2971	10- 33	AB	DJ		C
MSPRC2731FCZ1	572 258 3490	18- 8	AC	DJ		C
MSPRC3029FCZZ	572 258 4120	32- 9	AC	DJ	N	C
MSPRC3044FCZ1	572 258 4307	19- 19	AD	DJ	N	C
MSPRC3047FCZZ	572 258 4122	19- 9	AB	DJ	N	C
MSPRC3054FCZZ	572 258 4123	25- 27	AE	DJ	N	C
MSPRC3059FCZZ	572 258 4124	24- 24	AC	DJ	N	C
MSPRC3066FCZZ	572 258 4125	15- 29	AC	DJ	N	C
MSPRC3073FCZZ	572 258 4126	11- 28	AC	DJ	N	C
MSPRC3074FCZZ	572 258 4127	11- 6	AC	DJ	N	C
MSPRC3077FCZ1	572 258 4189	21- 10	AC	DJ	N	C
MSPRC3085FCZ1	572 258 4166	17- 37	AC	DJ	N	C
MSPRC3104FCZZ	572 258 4130	18- 20	AD	DJ	N	C
MSPRC3106FCZZ	572 258 4195	20- 60	AC	DJ	N	C
MSPRC3109FCZZ	572 258 4131	19- 27	AC	DJ	N	C
MSPRC3122FCZZ	572 258 4132	15- 9	AD	DJ	N	C
MSPRC3160FCZZ	572 258 4184	24- 49	AC	DJ	N	C
MSPRC3169FCZZ	572 258 4133	11- 14	AC	DJ	N	C
MSPRD3035FCZZ	572 258 4134	32- 6	AC	DJ	N	C
MSPRD3040FCZZ	572 258 4135	23- 25	AC	DJ	N	C

PARTS CODE	JAPAN ONLY ORDER CODE	NO.	PRICE R. Ex.	PRICE R. Ja.	NEW	P/R
MSPRD3041FCZZ	572 258 4136	23- 23	AD	DJ	N	C
MSPRD3042FCZZ	572 258 4137	23- 22	AD	DJ	N	C
MSPRD3045FCZZ	572 258 4138	19- 16	AD	DJ	N	C
MSPRD3046FCZZ	572 258 4139	19- 8	AD	DJ	N	C
MSPRD3057FCZZ	572 258 4140	25- 7	AC	DJ	N	B
MSPRD3058FCZZ	572 258 4141	25- 16	AC	DJ	N	C
MSPRD3067FCZZ	572 258 4142	17- 2	AC	DJ	N	C
MSPRD3084FCZZ	572 258 4143	11- 5	AD	DJ	N	C
MSPRD3093FCZ1	572 258 4144	16- 9	AC	DJ	N	C
MSPRD3097FCZZ	572 258 4145	18- 15	AC	DJ	N	C
MSPRD3099FCZ1	572 258 4185	15- 25	AC	DJ	N	C
MSPRD3100FCZZ	572 258 4147	14- 11	AC	DJ	N	C
MSPRD3102FCZZ	572 258 4148	27- 19	AC	DJ	N	C
MSPRD3103FCZZ	572 258 4149	27- 21	AD	DJ	N	C
MSPRD3125FCZZ	572 258 4150	31- 46	AD	DJ	N	C
MSPRD3163FCZZ	572 258 4151	27- 25	AC	DJ	N	C
MSPRP2825FCZZ	572 258 3919	8- 12	AC	DJ		C
MSPRP3009FCZZ	572 258 3922	4- 26	AD	DJ		C
MSPRP3030FCZZ	572 258 4167	32- 2	AD	DJ	N	C
MSPRP3031FCZZ	572 258 4168	32- 3	AF	DS	N	C
MSPRP3033FCZZ	572 258 4169	32- 4	AG	DX	N	C
MSPRP3034FCZZ	572 258 4170	32- 5	AG	DX	N	C
MSPRP3036FCZZ	572 258 4171	34- 18	AE	DJ	N	C
MSPRP3037FCZZ	572 258 4172	34- 11	AD	DJ	N	C
MSPRP3038FCZZ	572 258 4173	23- 9	AC	DJ	N	C
MSPRP3052FCZZ	572 258 4174	24- 12	AG	DS	N	C
MSPRP3056FCZZ	572 258 4175	24- 9	AF	DS	N	C
〃	572 258 4175	27- 4	AF	DS	N	C
MSPRP3081FCZZ	572 258 4176	28- 11	AF	DS	N	C
MSPRP3082FCZZ	572 258 4177	28- 8	AF	DS	N	C
MSPRP3105FCZZ	572 258 4178	17- 33	AC	DJ	N	C
MSPRP3164FCZZ	572 258 4179	29- 21	AD	DJ	N	C
〃	572 258 4179	34- 5	AD	DJ	N	C
MSPRP3168FCZZ		38- 2	AC	DJ	N	C
MSPRT1563FCZZ	572 258 0701	3- 3	AC	DD		C
MSPRT2414FCZZ	572 258 2452	20- 24	AC	DJ		C
〃	572 258 2452	24- 45	AC	DJ		B
〃	572 258 2452	25- 11	AC	DJ		B
MSPRT3032FCZZ	572 258 4152	32- 15	AC	DJ	N	C
MSPRT3049FCZZ	572 258 4153	20- 18	AC	DJ	N	C
MSPRT3050FCZZ	572 258 4154	21- 20	AC	DJ	N	C
MSPRT3063FCZZ	572 258 4155	26- 5	AC	DJ	N	C
MSPRT3064FCZZ	572 258 4156	28- 18	AD	DJ	N	C
MSPRT3092FCZZ	572 258 4192	16- 34	AC	DJ	N	C
MSPRT3094FCZ1	572 258 4157	16- 4	AC	DJ	N	C
〃	572 258 4157	17- 23	AC	DJ	N	C
MSPRT3098FCZZ	572 258 4158	7- 21	AC	DJ	N	C
MSPRT3110FCZ1	572 258 4180	28- 34	AC	DJ	N	C
MSPRT3121FCZ1	572 258 4306	14- 2	AC	DJ	N	C
MSPRT3165FCZZ	572 258 4162	20- 48	AC	DJ	N	C
MSPRT3190FCZZ	572 258 4186	24- 50	AF	DS	N	C
【N】						
NBLTH0239FCZZ	572 271 0408	11- 20	AF	DX		C
NBLTH0371FCZ1	572 271 0866	7- 20	AF	DS	N	B
NBLTH0373FCZZ	572 271 0854	18- 4	AF	DS	N	C
NBLTH0374FCZZ	572 271 0855	28- 25	AE	DJ	N	C
NBLTH0376FCZZ	572 271 0856	17- 29	AF	DS	N	C
NBLTT7029XCZZ	578 271 0045	14- 26	AG	DS		C
NBRGC0188FCZZ	572 272 0243	16- 28	AB	DD		C
〃	572 272 0243	17- 15	AB	DD		C
〃	572 272 0243	28- 20	AB	DD		C
NBRGC0280FCZZ	572 272 0272	14- 34	AB	DD		C
NBRGC0319FCZ1	572 272 0482	21- 13	AC	DJ		C
NBRGC0387FCZ1	572 272 0471	11- 11	AC	DJ		C
NBRGC0504FCZZ	572 272 0467	15- 7	AC	DJ		C
NBRGC0651FCZZ	572 272 0722	12- 10	AD	DJ		C
NBRGC0672FCZZ	572 272 0809	23- 6	AE	DJ	N	C
NBRGC0683FCZZ	572 272 0815	28- 10	AC	DJ	N	C
NBRGM0096FCZ1	572 272 0487	14- 9	AC	DJ		C
〃	572 272 0487	15- 18	AC	DJ		C
NBRGP0012QSZZ	578 272 0139	25- 2	AC	DJ		C
NBRGP0574FCZZ	572 272 0552	19- 37	AF	DS		C
NBRGP0604FCZZ	572 272 0684	18- 2	AD	DJ		C
NBRGP0626FCZZ	572 272 0678	10- 30	AC	DJ		C
〃	572 272 0678	16- 24	AC	DJ		C
〃	572 272 0678	17- 11	AC	DJ		C
〃	572 272 0678	18- 9	AC	DJ		C
NBRGP0664FCZZ	572 272 0725	20- 25	AD	DJ		C
NBRGP0675FCZZ	572 272 0817	19- 5	AH	DX	N	B
NBRGP0676FCZ1	572 272 0891	19- 20	AC	DJ	N	C
NBRGP0677FCZZ	572 272 0819	19- 2	AC	DJ	N	B

PARTS CODE	JAPAN ONLY ORDER CODE	NO.	PRICE R. Ex.	PRICE R. Ja.	NEW	P/R
NBRGP0678FCZZ	572 272 0820	19- 4	AF	DS	N	B
NBRGP0682FCZZ	572 272 0821	18- 6	AC	DJ	N	C
NBRGP0687FCZZ	572 272 0822	22- 28	AG	DS	N	C
NBRGP0688FCZ1	572 272 0823	22- 20	AD	DJ	N	C
NBRGY0466FCZZ	572 272 0425	7- 26	AK	EB		C
NBRGY0646FCZZ	572 272 0784	24- 38	AS	EQ		B
NBRGY0681FCZZ	572 272 0824	25- 15	AX	FG	N	B
NBRGY2122SCZZ	595 272 0047	12- 2	AB	DD		C
NCPL-0049FCBZ	572 274 0071	11- 16	AT	EZ		C
NCPL-0049FCZZ	572 274 0068	14- 29	AH	DX		C
NCPL-0056FCZZ	572 274 0077	23- 14	AF	DS	N	B
NFANP0068FCZZ	572 277 0120	33- 4	BB	GD	N	B
NFANP0070FCZZ	572 277 0121	1- 27	AZ	FX	N	B
NFANP0071FCZZ	572 277 0122	1- 29	AZ	FX	N	B
〃	572 277 0122	38- 25	AZ	FX	N	B
NFANP0072FCZZ	572 277 0123	31- 42	BA	FX	N	B
NGERH0111FCWZ	572 281 2095	12- 21	AD	DJ		C
〃	572 281 2095	16- 22	AD	DJ		C
〃	572 281 2095	17- 8	AD	DJ		C
NGERH0193FCZZ	572 281 0318	10- 10	AB	DD		C
NGERH0317FCZZ	572 281 0525	15- 5	AC	DJ		C
NGERH0484FCZZ	572 281 0654	28- 24	AB	DD		C
NGERH0780FCZ1	572 281 1074	24- 34	AE	DS		B
NGERH0866FCZZ	572 281 0955	12- 23	AC	DD		B
〃	572 281 0955	25- 5	AC	DD		C
〃	572 281 0955	28- 26	AC	DD		C
NGERH0867FCZZ	572 281 0956	12- 22	AC	DD		C
NGERH1062FCZZ	572 281 1253	24- 33	AE	DS		B
NGERH1245FCZZ	572 281 1588	17- 7	AF	DS		C
NGERH1252FCZZ	572 281 1595	12- 16	AD	DJ		C
NGERH1305FCZZ	572 281 1867	26- 6	AK	DX		B
NGERH1383FCZZ	572 281 2099	15- 17	AD	DJ		C
NGERH1496FCZZ	572 281 2321	12- 20	AE	DJ	N	C
NGERH1497FCZZ	572 281 2322	12- 14	AE	DS	N	B
NGERH1499FCZZ	572 281 2315	20- 44	AG	DX	N	B
NGERH1500FCZZ	572 281 2323	20- 21	AD	DJ	N	B
NGERH1501FCZZ	572 281 2324	21- 24	AK	EB	N	B
NGERH1502FCZZ	572 281 2325	21- 23	AD	DJ	N	C
NGERH1503FCZZ	572 281 2326	21- 19	AC	DJ	N	C
NGERH1504FCZZ	572 281 2327	21- 17	AD	DJ	N	C
NGERH1505FCZZ	572 281 2328	21- 22	AD	DJ	N	C
NGERH1507FCZZ	572 281 2316	24- 39	AT	EZ	N	B
NGERH1509FCZZ	572 281 2329	26- 9	AE	DJ	N	A
NGERH1510FCZZ	572 281 2330	12- 24	AD	DJ	N	B
NGERH1511FCZZ	572 281 2331	15- 11	AE	DJ	N	C
NGERH1525FCZZ	572 281 2332	21- 8	AD	DJ	N	C
NGERH1526FCZZ	572 281 2333	15- 8	AE	DJ	N	C
NGERH1529FCZZ	572 281 2337	22- 9	AC	DJ	N	C
NGERH1530FCZ1	572 281 2320	30- 5	AK	EB	N	C
NGERH1531FCZZ	572 281 2334	28- 5	AD	DJ	N	C
NGERH1536FCZZ	572 281 2335	15- 10	AC	DJ	N	C
NGERK1272FCZ1	572 281 1834	10- 27	AF	DS		C
NGERP1385FCZZ	578 281 0358	13- 16	AF	DS		C
NGERR1386FCZZ	572 281 2187	13- 18	AE	DJ		C
NPLYZ0005QSZZ	572 284 0700	7- 32	AG	DX		C
NPLYZ0006QSZZ	572 284 0701	7- 33	AD	DJ		C
NPLYZ0013QSZZ	578 284 0054	7- 13	AL	EB		C
NPLYZ0146FCZZ	572 284 0097	28- 27	AB	DD		C
NPLYZ0352FCZZ	572 284 0725	18- 5	AE	DJ		C
NPLYZ0365FCZZ	572 284 0788	11- 19	AC	DJ		C
NPLYZ0398FCZZ	572 284 0819	14- 25	AC	DJ		C
NPLYZ0401FCZZ	572 284 0876	7- 38	BB	GD	N	C
NPLYZ0402FCZZ	572 284 0871	28- 9	AD	DJ	N	C
NPLYZ0403FCZZ	572 284 0872	17- 30	AD	DJ	N	C
NPLYZ0404FCZZ	572 284 0873	14- 30	AE	DJ	N	C
NPLYZ0409FCZZ	572 284 0874	11- 15	AL	EB	N	C
NROLP0896FCZZ	572 287 1092	16- 2	AC	DD		C
〃	572 287 1092	17- 21	AC	DD		C
NROLP1060FCZZ	572 287 1396	14- 4	AF	DS		C
NROLP1403FCZZ	572 287 2391	18- 1	AR	FQ	N	C
NROLP1408FCZZ	572 287 2392	32- 10	AD	DJ	N	C
NROLP1432FCZZ	572 287 2393	28- 17	AE	DJ	N	C
NROLR1311FCZZ	572 287 2165	14- 28	AN	EG		B
〃	572 287 2165	15- 35	AN	EG		B
NROLR1391FCZZ	572 287 2368	19- 3	AY	FQ	N	A
NROLR1392FCZZ	572 287 2394	20- 19	BA	FX	N	A
NROLR1394FCZ1	572 287 2395	25- 1	AT	EZ	N	C
NROLR1395FCZZ	572 287 2396	24- 37	BN	HZ	N	A
NROLR1396FCZZ	572 287 2397	25- 14	BH	HV	N	A
NROLR1398FCZ1	572 287 2398	28- 22	AR	EQ	N	C
NROLR1399FCZ1	572 287 2399	28- 29	AR	EQ	N	C

PARTS CODE	JAPAN ONLY ORDER CODE	NO.	PRICE R. Ex.	PRICE R. Ja.	NEW	P/R
NROLR1400FCZZ	572 287 2400	15- 1	AS	EZ	N	C
NROLR1401FCZZ	572 287 2401	17- 14	AS	EQ	N	C
NROLR1402FCZZ	572 287 2402	18- 10	AU	EZ	N	C
NROLR1406FCZZ	572 287 2408	16- 27	AM	EG	N	C
NROLR1411FCZZ	572 287 2403	11- 17	AK	EB	N	B
〃	572 287 2403	17- 42	AK	EB	N	B
NROLR1428FCZZ	572 287 2369	11- 21	AK	DX	N	B
〃	572 287 2369	14- 27	AK	DX	N	B
NROLR1429FCZZ	572 287 2404	17- 16	AS	EQ	N	C
NSFTZ1805FCZZ	572 290 1403	3- 1	AE	DS		C
NSFTZ2467FCZZ	572 290 2317	10- 24	AF	DS		C
NSFTZ2591FCZZ	572 290 2727	11- 18	AF	DS		C
NSFTZ2685FCZ1	572 290 2901	30- 20	AL	EB	N	C
NSFTZ2687FCZZ	572 290 2902	12- 17	AK	EB	N	C
NSFTZ2688FCZZ	572 290 2903	12- 3	AL	EB	N	C
NSFTZ2689FCZZ	572 290 2904	19- 24	AR	EQ	N	C
NSFTZ2690FCZ1	572 290 2964	19- 18	AL	EB	N	C
NSFTZ2691FCZZ	572 290 2906	21- 1	AU	EZ	N	C
NSFTZ2694FCZZ	572 290 2907	7- 16	AP	EQ	N	C
NSFTZ2697FCZZ	572 290 2908	27- 20	AN	EQ	N	C
NSFTZ2700FCZZ	572 290 2909	11- 12	AQ	EQ	N	C
NSFTZ2701FCZZ	572 290 2910	14- 24	AK	DX	N	C
NSFTZ2703FCZZ		16- 33	AF	DS	N	C
NSFTZ2704FCZZ	572 290 2911	16- 3	AL	EB	N	C
〃	572 290 2911	17- 24	AL	EB	N	C
NSFTZ2707FCZZ	572 290 2912	14- 3	AH	DX	N	C
NSFTZ2712FCZ1	572 290 2963	20- 31	AN	EG	N	C
NSFTZ2713FCZZ	572 290 2914	28- 30	AK	DX	N	C
NSFTZ2730FCZZ	572 290 2915	21- 7	AK	EB	N	C
NSFTZ2736FCZZ	572 290 2916	22- 25	AP	EQ	N	C
NSFTZ2738FCZZ	572 290 2917	37- 45	AD	DJ	N	C
【P】						
PBOX-0131FCZZ	572 307 0477	34- 4	AU	EZ	N	C
PBRSR0218FCZ1	572 310 0367	28- 16	AH	DX	N	B
PBRSR0219FCZ1	572 310 0368	27- 30	AG	DX	N	B
PBRSR0222FCZZ	572 310 0369	19- 34	AK	DX	N	B
PBRSR0223FCZ1	572 310 0380	19- 35	AL	EB	N	B
PBRSR0224FCZZ	572 310 0371	24- 48	AH	DX	N	B
PCAPH0009YSZZ	578 312 0026	20- 16	AC	DJ		C
PCAPH0010GCZZ	578 312 0023	49- 101	AD	DJ		C
〃	578 312 0023	53- 1	AD	DJ		C
〃	578 312 0023	58- 1	AD	DJ		C
PCAPH0082FCZZ	572 312 0079	29- 1	AD	DJ	N	B
PCASZ0298FCZZ	572 315 0228	20- 27	AQ	EQ	N	C
PCASZ0299FCZZ	572 315 0229	11- 1	AF	DS	N	C
PCLC-0297FCZZ	572 316 0390	12- 5	AU	FG		B
PCLC-0298FCZZ	572 316 0391	12- 13	AT	EZ		B
〃	572 316 0391	15- 19	AT	EZ		B
PCLC-0316FCZ1	572 316 0424	15- 34	AR	EQ	N	B
〃	572 316 0424	17- 43	AR	EQ	N	B
PCLC-0317FCZZ	572 316 0425	14- 10	AR	EQ	N	B
PCLC-0318FCZZ	572 316 0426	20- 22	AC	DJ	N	B
PCLC-0321FCZZ	572 316 0428	11- 8	AT	EZ	N	B
PCLR-0441FCZZ	572 318 0490	30- 24	AK	DX		C
PCLR-0442FCZZ	572 318 0491	16- 32	AD	DJ		C
PCLR-0450FCZZ	572 318 0529	17- 28	AD	DJ		C
PCLR-0474FCZZ	572 318 0593	21- 14	AC	DJ	N	C
PCLR-0475FCZZ	572 318 0594	24- 10	AA	DJ	N	C
〃	572 318 0594	27- 5	AA	DJ	N	C
PCLR-0477FCZZ	572 318 0595	26- 10	AE	DJ	N	C
PCLR-0479FCZZ	572 318 0592	28- 36	AC	DJ	N	C
PCOVP0911FCZ2	572 323 2321	2- 30	AD	DJ	N	D
PCOVP0941FCZ2	572 323 2322	2- 31	AD	DJ	N	D
PCOVP1468FCZZ	572 323 1745	53- 2	AD	DJ		D
〃	572 323 1745	58- 2	AD	DJ		D
PCOVP1509FCZZ	572 323 1968	17- 25	AH	DX		D
PCOVP1564FCZZ	572 323 2178	37- 1	AF	DS		D
PCOVP1618FCZ1	572 323 2324	1- 34	AH	DX	N	D
PCOVP1623FCZ1	572 323 2325	1- 36	AH	DX	N	D
PCOVP1631FCZZ	572 323 2326	6- 4	AP	EQ	N	C
PCOVP1632FCZZ	572 323 2327	6- 30	AM	EG	N	C
PCOVP1634FCZZ	572 323 2328	29- 14	AF	DS	N	C
PCOVP1636FCZ1	572 323 2355	24- 11	AW	EZ	N	C
PCOVP1637FCZZ	572 323 2330	24- 18	AN	EQ	N	C
PCOVP1638FCZZ	572 323 2331	25- 35	AZ	FX	N	C
PCOVP1639FCZ5	572 323 2332	14- 1	AR	EQ	N	C
PCOVP1639FCZZ	572 323 2454	14- 1	AQ	EQ	N	C
PCOVP1640FCZ1	572 323 2455	15- 22	AN	EQ	N	C
PCOVP1640FCZ5	572 323 2333	15- 22	AL	EB	N	C
PCOVP1641FCZZ	572 323 2334	15- 26	AG	DS	N	C
PCOVP1642FCZ1	572 323 2335	14- 18	AL	EB	N	C

PARTS CODE	JAPAN ONLY ORDER CODE	NO.	PRICE R. Ex.	PRICE R. Ja.	NEW	P/R
PCOVP1643FCZ1	572 323 2336	10- 3	AU	EZ	N	D
PCOVP1646FCZZ	572 323 2337	2- 10	AG	DX	N	D
PCOVP1648FCZ1	572 323 2338	20- 47	AE	DJ	N	C
PCOVP1649FCZZ	572 323 2339	20- 15	AN	EG	N	C
PCOVP1650FCZZ	572 323 2340	24- 1	AT	DX	N	C
PCOVP1652FCZZ	572 323 2341	13- 26	AN	EG	N	C
PCOVP1653FCZZ	572 323 2342	13- 3	AN	EQ	N	C
PCOVP1654FCZZ	572 323 2198	30- 8	AM	EG		C
PCOVP1656FCZZ	572 323 2343	27- 29	AG	DX	N	D
PCOVP1658FCZ1	572 323 2344	14- 17	AG	DX	N	C
PCOVP1659FCZZ	572 323 2345	30- 26	AK	DX	N	C
PCOVP1660FCZZ	572 323 2346	30- 23	AM	EG	N	C
PCOVP1697FCZZ	572 323 2347	34- 7	AG	DX	N	C
PCOVP1698FCZZ	572 323 2348	34- 10	AN	EQ	N	C
PCOVP1699FCZ1	572 323 2356	34- 2	AN	EQ	N	C
PCOVP1700FCZZ	572 323 2350	30- 30	AG	DX	N	C
PCOVP1703FCZ5	572 323 2351	1- 12	AP	EQ	N	C
PCOVP1703FCZZ	578 323 0281	1- 12	AP	EQ	N	C
PCOVP1706FCZ5	572 323 2352	1- 39	AE	DJ	N	C
PCOVP1706FCZZ	572 323 2358	1- 39	AE	DS	N	C
PCOVP1707FCZZ	572 323 2453	16- 13	AG	DX	N	D
PCUSF0334FCZZ	572 326 0296	8- 9	AP	EQ		C
PCUSS0374FCZZ	572 326 0515	6- 24	AE	DS	N	C
PCUSU0203FCZZ	572 326 0021	8- 6	AE	DS		C
PDUC-0166FCZZ	572 332 0235	33- 17	AX	EZ	N	C
PDUC-0167FCZ2	572 332 0249	32- 16	AK	EB	N	C
PDUC-0168FCZZ	572 332 0237	33- 15	AK	DX	N	C
PDUC-0169FCZ1	572 332 0234	31- 44	AE	DS	N	C
PFiLW0294FCZZ	572 337 0410	4- 22	AE	DS	N	C
PFiLZ0290FCZ1	572 337 0411	33- 2	BA	FX	N	A
PFiLZ0296FCZZ	572 337 0412	1- 38	AQ	EQ	N	A
PFTA-0134FCZ1	572 344 0114	2- 8	AE	DS	N	C
PFTA-0141FCZ5	572 344 0115	1- 7	AK	DX	N	D
PFTA-0141FCZZ	572 344 0118	1- 7	AH	DX	N	D
PFTA-0142FCZZ	572 344 0116	1- 11	AE	DS	N	D
PFTA-0144FCZZ	572 344 0117	2- 21	AE	DJ	N	D
PGiDH1833FCZ1	572 345 3731	10- 11	AC	DJ		C
PGiDH1968FCZZ	572 345 3904	25- 39	AK	EB	N	C
PGiDH2016FCZZ	572 345 3905	34- 14	AC	DJ	N	C
PGiDM1802FCZZ	572 345 2967	17- 18	AK	DX		C
PGiDM1890FCZZ	572 345 3688	7- 5	AC	DJ		C
PGiDM1966FCZ1	572 345 3906	32- 12	AP	EQ	N	C
PGiDM1967FCZZ	572 345 3907	32- 1	AR	EG	N	C
PGiDM1969FCZZ	572 345 3908	27- 24	AN	FQ	N	B
PGiDM1970FCZZ	572 345 3909	27- 2	BB	EQ	N	C
PGiDM1971FCZZ	572 345 3896	28- 7	AY	FQ	N	C
PGiDM1972FCZZ	572 345 3910	28- 15	AY	FQ	N	C
PGiDM1973FCZ5	572 345 3911	15- 36	AS	EQ	N	C
PGiDM1973FCZZ	572 345 3950	15- 36	AU	EZ	N	C
PGiDM1974FCZ1	572 345 3951	14- 6	AV	FG	N	C
PGiDM1974FCZ5	572 345 3912	14- 6	AV	FG	N	C
PGiDM1977FCZZ	572 345 3913	16- 1	AN	EG	N	C
PGiDM1978FCZZ	572 345 3914	17- 35	AW	FG	N	C
PGiDM1979FCZZ	572 345 3915	18- 12	AH	DX	N	C
PGiDM1981FCZZ	572 345 3916	11- 13	AH	DX	N	C
PGiDM1982FCZZ	572 345 3917	17- 44	AF	DS	N	C
PGiDM1983FCZZ	572 345 3918	11- 25	AS	EQ	N	C
PGiDM1984FCZZ	572 345 3919	17- 36	AF	DS	N	C
PGiDM1985FCZZ	572 345 3920	14- 14	AF	DS	N	C
PGiDM1986FCZZ	572 345 3921	13- 25	AF	DS	N	C
PGiDM1987FCZZ	572 345 3922	13- 24	AG	DS	N	C
PGiDM1988FCZZ	572 345 3923	17- 20	AS	EZ	N	C
PGiDM1989FCZZ	572 345 3948	16- 31	AH	DX	N	C
PGiDM1990FCZZ	572 345 3949	16- 30	AH	DX	N	C
PGiDM1991FCZZ	572 345 3924	30- 13	AE	DJ	N	C
PGiDM1992FCZZ	572 345 3925	30- 12	AD	DJ	N	C
PGiDM2007FCZZ	572 345 3926	28- 31	AP	EQ	N	C
PGiDW2015FCZZ	572 345 3897	13- 11	AG	DS	N	C
PGLSP0003QSZZ	572 348 0134	2- 12	BA	FX		D
PGUMS0283FCZ1	572 352 0337	7- 25	AA	DJ		C
PHOG-0385FCZZ	572 355 0251	34- 9	AB	DD		C
PLNS-0076FCZZ	572 372 0099	22- 6	AL	EB	N	B
PMAGT0015FCZZ	572 373 0029	1- 17	AD	DJ		C
PMiR-0164FCZZ	572 374 0221	8- 13	AP	EQ		C
PMLT-1287FCZZ	572 375 1027	20- 30	AB	DJ	N	C
PMLT-1288FCZ1	572 375 1028	20- 28	AB	DJ	N	C
PMLT-1298FCZ1	572 375 1037	6- 29	AE	DS	N	C
PMLT-1303FCZ1	572 375 1030	16- 19	AD	DJ	N	C
PMLT-1304FCZZ	572 375 1031	16- 10	AC	DJ	N	C
PMLT-1305FCZZ	572 375 1032	16- 8	AC	DJ	N	C
PMLT-1312FCZZ	572 375 1033	22- 26	AB	DJ	N	C

PARTS CODE	JAPAN ONLY ORDER CODE	NO.	PRICE R. Ex.	PRICE R. Ja.	NEW	P/R
PMLT-1313FCZZ	572 375 1034	16- 12	AC	DJ	N	C
PMLT-1316FCZZ	572 375 1035	1- 37	AC	DJ	N	C
PMLT-1317FCZZ	572 375 1036	16- 20	AH	DX	N	C
PRDAF0089FCZZ	572 397 0197	58- 4	AU	EZ		C
PRDAR0057FCZ1		58- 3	AF	DS	N	C
PREFL0172FCZZ	572 432 0074	8- 3	AK	DX		C
PRNGP0077FCZZ	572 399 0159	26- 11	AA	DD		C
〃	572 399 0159	28- 23	AA	DD		C
PRNGP0081FCZZ	572 399 0178	17- 31	AA	DJ		C
PRNGP0109FCZZ	572 399 0254	25- 29	AA	DJ	N	C
PRNGP0110FCZZ	572 399 0255	23- 13	AA	DJ	N	C
PSEL-0809FCZZ	572 400 0808	20- 14	AD	DJ	N	C
PSEL-0829FCZ1	572 400 0810	22- 29	AC	DJ	N	C
PSEL-0830FCZZ	572 400 0820	22- 33	AA	DJ	N	C
PSEL-0831FCZZ	572 400 0811	20- 52	AC	DJ	N	C
PSEL-0832FCZZ	572 400 0812	20- 53	AC	DJ	N	C
PSEL-0835FCZ1	572 400 0814	22- 31	AC	DJ	N	C
PSEL-0853FCZZ	572 400 0815	20- 5	AC	DJ	N	C
PSEL-0854FCZZ	572 400 0816	20- 55	AA	DJ	N	C
PSEL-0855FCZZ	572 400 0817	20- 54	AA	DJ	N	C
PSEL-0864FCZZ	572 400 0818	22- 32	AD	DJ	N	C
PSEL-0866FCZZ	572 400 0821	22- 34	AB	DJ	N	C
PSHEP4932FCZ1	572 403 5213	6- 28	AC	DJ		C
PSHEP4968FCZZ	572 403 5231	20- 10	AD	DJ	N	C
PSHEP4970FCZ2	572 403 5232	15- 39	AE	DS	N	C
PSHEP4971FCZZ	572 403 5233	15- 2	AC	DJ	N	C
PSHEP4972FCZ1	572 403 5234	18- 11	AE	DS	N	C
PSHEP4985FCZ1	572 403 5235	18- 19	AE	DJ	N	C
PSHEP4986FCZZ	572 403 5236	21- 27	AC	DJ	N	C
PSHEP4993FCZ2	572 403 5237	15- 40	AE	DS	N	C
PSHEP5006FCZZ	572 403 5238	4- 28	AE	DS	N	C
PSHEP5013FCZ1		36- 10	*	*	N	D
PSHEP5013FCZ2		36- 10	*	*	N	D
PSHEP5013FCZ3		36- 10	*	*	N	D
PSHEP5013FCZ4		36- 10	*	*	N	D
PSHEP5013FCZ5		36- 10	*	*	N	D
PSHEP5013FCZ6		36- 10	*	*	N	D
PSHEP5013FCZ7		36- 10	*	*	N	D
PSHEP5013FCZ8		36- 10	*	*	N	D
PSHEP5013FCZZ		36- 10	*	*	N	D
PSHEP5015FCZZ	572 403 5239	25- 37	AD	DJ	N	C
PSHEP5019FCZZ	572 403 5240	8- 8	AF	DS	N	C
PSHEP5022FCZZ	572 403 5241	14- 23	AC	DJ	N	C
PSHEP5037FCZZ	572 403 5242	14- 7	AC	DJ	N	C
PSHEP5061FCZ1	572 403 5272	22- 13	AD	DJ	N	C
PSHEP5062FCZZ	572 403 5273	22- 5	AB	DJ	N	C
PSHEP5071FCZZ	572 403 5243	14- 15	AB	DJ	N	C
PSHEP5075FCZZ	572 403 5244	6- 18	AF	DS	N	C
PSHEP5076FCZZ	572 403 5245	20- 56	AC	DJ	N	C
PSHEP5086FCZZ	572 403 5246	14- 33	AB	DJ	N	C
PSHEP5087FCZZ	572 403 5247	19- 36	AC	DJ	N	C
PSHEP5089FCZZ	572 403 5248	22- 15	AA	DJ	N	C
PSHEP5111FCZZ	572 403 5279	33- 20	AA	DJ	N	C
PSHEP5115FCZZ	572 403 5280	16- 36	AC	DJ	N	C
PSHEP5119FCZZ	578 403 0860	14- 35	AB	DJ	N	C
PSHEP5121FCZZ	572 403 5283	22- 35	AA	DJ	N	C
PSHEP5127FCZZ	572 403 5323	25- 43	AC	DJ	N	C
PSHEP5130FCZZ		19- 40	AA	DJ	N	C
PSHEZ3130FCZZ	572 403 2466	10- 7	AB	DD		C
PSHEZ4684FCZZ	572 403 4410	58- 5	AC	DJ		C
PSHEZ4788FCZ1	572 403 4682	15- 3	AD	DJ		C
PSHEZ4836FCZZ	572 403 5061	6- 35	AB	DJ		C
PSHEZ4843FCZ1	572 403 5215	6- 27	AC	DJ		C
PSHEZ4879FCZZ	572 403 5068	37- 33	AH	DX		C
PSHEZ4906FCZZ	572 403 5069	4- 25	AC	DJ		C
PSHEZ4933FCZZ	572 403 5099	37- 24	AD	DJ		C
PSHEZ4973FCZZ	572 403 5250	19- 1	AH	DX	N	B
PSHEZ4974FCZZ	572 403 5251	20- 57	AC	DJ	N	B
PSHEZ4997FCZ1	572 403 5253	22- 11	AC	DJ	N	A
PSHEZ4998FCZ1	572 403 5254	22- 12	AB	DJ	N	A
PSHEZ5007FCZZ	572 403 5255	17- 32	AF	DS	N	C
PSHEZ5027FCZZ	572 403 5256	22- 8	AB	DJ	N	B
PSHEZ5059FCZZ	572 403 5210	5- 1	AU	EZ		D
PSHEZ5065FCZZ	572 403 5257	4- 19	AQ	EQ	N	C
PSHEZ5074FCZZ	572 403 5259	27- 33	AC	DJ	N	C
PSHEZ5088FCZZ	572 403 5261	15- 37	AF	DS		C
PSHEZ5099FCZ1	572 403 5281	22- 30	AC	DJ	N	C
PSHEZ5126FCZZ	572 403 5324	20- 63	AF	DS	N	C
PSHT-0094FCZZ	572 407 0120	20- 46	AD	DJ	N	C
PSLDH0178FCZZ	572 408 0142	3- 6	AD	DJ		C
PSTK-0015FCZ2	572 441 0013	5- 6	AU	EZ	N	C

PARTS CODE	JAPAN ONLY ORDER CODE	NO.	PRICE R. Ex.	PRICE R. Ja.	NEW	P/R
PTME-0271FCZZ	572 420 0296	13- 23	AD	DJ		C
PTME-0276FCZ1	572 420 0320	24- 44	AK	EB		A
〃	572 420 0320	25- 12	AK	EB		A
PTME-0290FCZZ	572 420 0346	27- 17	AD	DJ	N	C
PTPE-0243FCZ1	572 423 0239	10- 12	AC	DJ		C
PWiR-0199FCZZ	572 427 1665	7- 1	AR	EQ	N	C
PWiR-0200FCZZ	572 427 1666	7- 7	AR	EQ	N	C
【Q】						
QACCB7623QCZZ	572 500 0067	36- 11	AQ	EQ	N	B
QACCB7626QCPZ		36- 11	＊	＊	N	B
QACCD7912QCPZ	572 500 0094	36- 11	AS	EQ	N	B
QACCE6922QCPZ	572 500 0097	36- 11	AQ	EQ	N	B
QACCJ6912QCPZ	572 500 0095	36- 11	AV	FG	N	B
QACCL7922QCPZ	572 500 0096	36- 11	AN	EQ	N	B
QCNCM0672FCZZ	595 510 0041	55- 1	AB	DD		C
QCNCM0879FCZZ	572 510 0823	51- 1	AF	DS		C
QCNCM0923FC10	572 510 0876	51- 2	AE	DJ		C
〃	572 510 0876	52- 1	AE	DJ		C
〃	572 510 0876	53- 96	AE	DJ		C
QCNCM0923FC12	572 510 0939	51- 3	AE	DJ		C
〃	572 510 0939	55- 2	AE	DJ		C
QCNCM0923FC14	572 510 0937	52- 2	AE	DJ		C
〃	572 510 0937	53- 3	AE	DJ		C
QCNCM0923FC16	572 510 0868	51- 4	AF	DS		C
〃	572 510 0868	52- 3	AF	DS		C
QCNCM0923FC22	572 510 0869	51- 5	AF	DS		C
〃	572 510 0869	53- 4	AF	DS		C
QCNCM0923FC24	572 510 0870	51- 6	AF	DS		C
〃	572 510 0870	52- 4	AF	DS		C
〃	572 510 0870	53- 5	AF	DS		C
QCNCM0923FC32	572 510 0871	51- 7	AG	DS		C
QCNCM0923FC3D	594 510 0463	51- 8	AF	DS		C
〃	594 510 0463	55- 3	AF	DS		C
QCNCM0931FCZZ	572 510 0872	55- 4	AF	DS		C
QCNCM0991FCZZ	572 510 0996	52- 5	AG	DX		C
〃	572 510 0996	56- 1	AG	DX		C
QCNCM0999FCZZ	572 510 1004	12- 18	AC	DJ		C
QCNCM1000FCZZ	572 510 1044	12- 19	AC	DJ		C
QCNCM1069AC0H	596 510 0032	55- 5	AE	DJ		C
QCNCM1069AC1J	569 510 0003	52- 6	AD	DJ		C
〃	569 510 0003	53- 6	AD	DJ		C
〃	569 510 0003	55- 6	AD	DJ		C
QCNCM1069ACZZ	541 510 5071	49- 1	AD	DD		C
QCNCM1156FCZZ	572 510 1226	50- 81	AD	DJ		C
QCNCM1171FCZZ	572 510 1229	54- 1	AE	DS		C
QCNCM1172FCZZ		56- 2	AL	EB	N	C
QCNCM1182FCZZ	572 510 1230	58- 6	AM	EG		C
QCNCM1183FCZZ	572 510 1231	58- 7	AM	EG		C
QCNCM1187FCZZ	572 510 1359	53- 7	AM	EG	N	C
QCNCM7014SC0B	595 510 0337	49- 2	AD	DJ		C
QCNCM7014SC0C	595 510 0338	49- 3	AA	DD		C
〃	595 510 0338	51- 9	AA	DD		C
〃	595 510 0338	53- 8	AA	DD		C
QCNCM7014SC0F	595 510 0346	51- 10	AB	DD		C
〃	595 510 0346	52- 7	AB	DD		C
〃	595 510 0346	55- 7	AB	DD		C
QCNCM7014SC0G	595 510 0347	53- 9	AB	DD		C
QCNCP0340QCZZ	572 510 0921	58- 8	AC	DJ		C
QCNCW0864FCZZ	572 510 0770	55- 8	AG	DX		C
QCNCW0885FCZZ	572 510 0834	51- 11	AG	DX		C
QCNCW0948FCZ6	572 510 1079	53- 10	AC	DJ		C
QCNCW1047FCZZ	572 510 1126	53- 11	AH	DX		C
QCNCW1155FCZZ	572 510 1220	49- 4	AE	DJ		C
〃	572 510 1220	50- 1	AE	DJ		C
QCNCW1157FCZZ	572 510 1358	52- 8	AB	DJ		C
QCNCW1164FCZZ		56- 3	AE	DJ	N	C
QCNCW1165FCZZ		56- 4	AG	DX	N	C
QCNCW1169FCZZ	572 510 1214	52- 9	AG	DS		C
QCNCW1170FCZZ	572 510 1215	51- 13	AG	DS		C
〃	572 510 1215	53- 12	AG	DS		C
QCNCW1186FCZZ	572 510 1352	53- 13	AF	DS		C
QCNCW1190FCZZ	572 510 1360	58- 10	AN	EG		C
QCNCW5380NCZZ	585 510 0432	52- 10	AC	DJ		C
QCNW-0190FCZZ	572 512 0429	31- 38	AD	DJ	N	C
QCNW-0197FCZZ	572 512 0430	35- 3	AL	EB	N	C
〃	572 512 0430	6- 36	AL	EB	N	C
QCNW-0199FCZZ	572 512 0431	8- 15	AE	DJ	N	C
QCNW-0210FCZZ	572 512 0423	37- 37	AE	DJ		C
QCNW-0211FCZZ	572 512 0432	35- 15	AF	DS	N	C
QCNW-0213FCZZ	572 512 0434	35- 4	AH	DX	N	C
〃	572 512 0434	6- 37	AH	DX	N	C

PARTS CODE	JAPAN ONLY ORDER CODE	NO.	PRICE R. Ex.	PRICE R. Ja.	NEW	P/R
QCNW-0214FCZZ	572 512 0435	4- 8	AD	DJ	N	C
QCNW-0215FCZZ	572 512 0436	34- 17	AZ	FQ	N	C
QCNW-7197XCZZ	578 512 0283	36- 27	AH	DX		C
QEARP0138FCZZ	572 514 0107	19- 25	AE	DJ	N	C
QEARP0139FCZZ	572 514 0108	19- 22	AD	DJ	N	C
QEARP0140FCZZ	572 514 0109	22- 19	AD	DJ	N	C
QFS-D1327QCZZ	572 515 0397	55- 9	AE	DS		A
QFS-E1111QCZZ		56- 5	AF	DS		A
QFSHB0028FCZZ	578 516 0011	55- 10	AC	DJ		C
〃	578 516 0011	56- 6	AC	DJ		C
QJAKT0001FCZZ	578 517 0010	50- 2	AD	DJ		C
QJAKT0002FCZZ	578 517 0009	50- 3	AE	DJ		C
QPiN-0003GCZZ	578 523 0004	49- 102	AC	DJ		C
〃	578 523 0004	53- 14	AC	DJ		C
〃	578 523 0004	58- 11	AC	DJ		C
QSŌCD0081FCZZ	572 527 0125	50- 82	AL	EB		C
QSŌCN0002ESZZ	578 527 0030	58- 9	AH	DX		C
QSŌCN0005ESZZ	578 527 0032	58- 12	AE	DS		C
QSŌCN0082FCZZ	572 527 0124	49- 5	AP	EQ		C
QSŌCZ0001QSZZ	578 527 0024	53- 15	AL	EB		C
〃	578 527 0024	58- 13	AL	EB		C
QSŌCZ0002QSZZ	578 527 0027	58- 14	AD	DJ		C
QSŌCZ0071FCZZ	572 527 0112	52- 11	AP	EQ		C
QSŌCZ0073FCNA	572 527 0126	58- 15	AL	EB		C
QSŌCZ0073FCZZ	572 527 0115	49- 6	AL	EB		C
〃	572 527 0115	51- 14	AL	EB		C
〃	572 527 0115	53- 16	AL	EB		C
QSŌCZ6428ACZZ	541 527 1013	51- 15	AE	DS		C
〃	541 527 1013	52- 12	AE	DS		C
〃	541 527 1013	53- 17	AE	DS		C
QSW-B0017QSZZ	572 530 0719	13- 6	AF	DS	N	B
〃	572 530 0719	20- 49	AF	DS	N	B
QSW-C1390QCZZ	572 530 0507	30- 1	AN	EQ		B
QSW-C9294QCZZ	572 530 0681	31- 48	AF	DS		B
QSW-C9295QCZZ	572 530 0682	37- 15	AL	EB		B
QSW-M0502FCZZ	572 530 0603	17- 6	AH	DX		B
〃	572 530 0603	30- 3	AH	DX		B
〃	572 530 0603	31- 1	AH	DX		B
QSW-P0005QSZZ	572 530 0672	54- 3	AC	DJ		B
QSW-P0469FCZZ	572 530 0536	54- 4	AD	DS		B
【R】						
RALMB1002LCZZ	594 601 0010	54- 5	AE	DS		B
RCiLF0068FCZZ	572 614 0193	56- 7	AF	DS		C
RCiLZ0089FCZZ	572 614 0239	50- 6	AG	DX		C
RCiLZ0353AFZZ	596 614 0565	58- 16	AH	DX		C
RC-KZ0008QCZZ	572 591 0090	49- 7	AB	DD		C
〃	572 591 0090	50- 4	AB	DD		C
RC-KZ0009QCZZ	572 591 0093	50- 83	AB	DD		C
RC-KZ1054CCN2	541 590 5042	55- 11	AB	DD		C
RCŌRF0046FCZZ	572 615 0085	36- 28	AH	DX	N	C
RCŌRF1057ACZZ	596 615 0149	58- 17	AB	DJ		C
RCRSP0068FCZZ	572 616 0152	49- 8	AG	DS		B
RCRSP0069FCZZ	572 616 0153	49- 9	AG	DS		B
〃	572 616 0153	53- 18	AG	DS		B
RCRSP0071FCZZ		51- 16	AH	DX	N	B
RCRSP0077FCZZ	572 616 0175	53- 19	AF	DS		B
RCRSP0079FCZZ	572 616 0176	53- 20	AF	DS		B
RCRSP0080FCZZ	572 616 0180	58- 18	AF	DS		B
RCRSP6676RCZZ	579 616 0064	53- 21	AG	DX		B
〃	579 616 0064	58- 20	AG	DX		B
RCRSQ0072FCZZ	572 616 0177	52- 13	AF	DS		B
RCRSQ0073FCZZ	572 616 0178	52- 14	AF	DS		B
〃	572 616 0178	53- 22	AF	DS		B
RCRSQ0074FCZZ	572 616 0179	52- 15	AF	DS		B
RCRSZ0001QSZZ	572 616 0100	51- 17	AG	DS		B
〃	572 616 0100	52- 16	AG	DS		B
RCRUA0010FCZZ	572 616 0154	49- 10	AQ	EQ		B
RDENC0004FCZZ	572 685 2080	37- 11	BV	RB		E
〃	572 685 2080	57- 901	BV	RB		E
RDENC0012FCZZ	572 685 2218	31- 39	BR	LX	N	E
RDENC0013FCZZ	572 685 2219	31- 37	BK	HG	N	E
RDENC0020FCZ1	572 685 2216	31- 31	BU	NE	N	E
RDENC0021FCZZ	572 685 2177	31- 31	BW	RJ	N	E
RDTCH0155FCZZ	572 618 0167	13- 19	AU	EZ	N	B
RDTCT0153FCZZ	572 618 0168	24- 30	AN	EQ	N	B
〃	572 618 0168	25- 19	AN	EQ	N	B
RFiLN0046FCZZ	572 621 0067	52- 17	AH	DX		C
RFiLN0047FCZZ	572 621 0063	49- 12	AC	DJ		C
〃	572 621 0063	50- 7	AC	DJ		C
RFiLN0048FCZZ	572 621 0064	58- 21	AC	DJ		C
RFiLN2011SCZZ	595 621 0004	50- 8	AC	DJ		C

PARTS CODE	JAPAN ONLY ORDER CODE	NO.	PRICE R. Ex.	PRICE R. Ja.	NEW	P/R
RFiLN5022NCZZ	585 621 0015	53- 23	AC	DJ		C
RFiLZ0004QSZZ	578 621 0030	51- 18	AM	EG		C
RFiLZ1042LCZZ	594 621 0050	49- 13	AC	DJ		C
〃	594 621 0050	52- 18	AC	DJ		C
RFiLZ1043LCZZ	594 621 0051	51- 19	AC	DJ		C
〃	594 621 0051	52- 19	AC	DJ		C
〃	594 621 0051	53- 24	AC	DJ		C
RHETP0084FCZZ	572 623 0099	30- 11	AS	EQ		C
RHETP0099FCZZ	572 623 0103	6- 31	AV	EQ	N	C
RH-iX0002FCZZ	572 573 2550	49- 35	AQ	EQ		B
RH-iX0003QSZZ	578 573 1149	51- 20	AQ	EQ		B
〃	578 573 1149	52- 20	AQ	EQ		B
RH-iX0004FCZZ	572 573 2545	49- 53	AS	EQ		B
RH-iX1013ACZZ	596 573 4270	58- 22	BK	HC		B
RH-iX3103YAZZ	595 573 5963	52- 21	AG	DS		B
〃	595 573 5963	53- 25	AG	DS		B
RLMPD0674FCZ1	572 626 0648	8- 1	BE	GN	N	B
RLMPU0668FCZZ	572 626 0644	24- 41	BA	FX	N	B
RLMPU0669FCZZ	572 626 0645	24- 41	BA	FX	N	B
RLMPU0670FCZZ	572 626 0646	25- 13	AZ	FQ	N	B
RLMPU0671FCZZ	572 626 0647	25- 13	AZ	FQ	N	B
RLMPU0672FCZZ	572 626 0649	24- 41	BA	FX	N	B
RLMPU0673FCZZ	572 626 0650	25- 13	AZ	FQ	N	B
RMEMM0001FCZZ	572 629 0001	53- 26	BZ	TF		B
RMOTP0891FCZZ	572 630 1123	12- 7	BG	GT	N	B
RMOTS0879FCNA	572 630 1131	23- 29	BD	GN	N	B
RMOTS0879FCZZ	572 630 1124	23- 10	BD	GN	N	B
RMOTS0881FCZZ	572 630 1125	20- 38	BC	GD	N	B
RMOTS0882FCZZ	572 630 1126	21- 29	BA	FX	N	B
RMOTS0883FCZZ	572 630 1127	31- 56	BA	FX	N	B
RMOTS0884FCZZ	572 630 1128	26- 3	BA	FX	N	B
RMOTS0885FCZ1	572 630 1129	7- 19	BE	GN	N	B
RMOTS0890FCZZ	572 630 1130	28- 1	BA	FX	N	B
RMPTC4103QCJJ	594 631 0091	52- 22	AC	DD		B
RMPTC4330QCJJ	594 631 0082	52- 23	AC	DD		B
RMPTC4473QCJJ	593 631 0296	52- 24	AC	DD		B
RMPTR4100ACZZ	567 631 0099	58- 23	AB	DD		B
RMPTR4103ACZZ	567 631 0100	58- 24	AB	DD		B
RMPTR4330ACZZ	567 631 0109	58- 25	AB	DD		B
RMPTW4100QCJJ	572 631 0264	53- 27	AA	DD		B
RMPTW4101QCJJ	521 631 0027	51- 21	AB	DD		B
〃	521 631 0027	53- 28	AB	DD		B
RMPTW4102QCJJ	567 631 0055	51- 22	AB	DD		B
RMPTW4103QCJJ	571 631 0147	51- 23	AB	DD		B
〃	571 631 0147	53- 29	AB	DD		B
〃	571 631 0147	55- 12	AB	DD		B
RMPTW4330QCJJ	567 631 0058	51- 24	AB	DD		B
RMPTW4470QCJJ	521 631 0024	53- 30	AB	DD		B
RMPTW4472QCJJ	567 631 0059	51- 26	AB	DD		B
RMPTW4473QCJJ	567 631 0060	51- 27	AB	DD		B
〃	567 631 0060	55- 13	AB	DD		B
RPLU-0013QSZZ	572 647 0336	20- 35	AN	EG		B
RRLYD1211QCZZ	572 637 0164	50- 10	AH	DX		B
RRLYD1411QCZZ	572 637 0165	50- 11	AM	EG		B
RRLYD3211QCZZ	595 637 0065	50- 84	AM	EG		B
RR-WZ0418FCZZ	572 580 1088	50- 9	AF	DS		B
RTHM-0021FCZZ	572 644 0029	25- 18	AN	EG		B
RTHM-0022FCZZ	572 644 0030	24- 27	AN	EG		B
RTRNP0534FCZZ	572 654 0285	50- 85	AT	EZ		B
RTRNP2105SCZZ	595 654 0032	50- 86	AP	EQ		B
RTRNZ0511FCZZ	572 660 0367	56- 8	AQ	EQ		B
【S】						
SPAKA0581YSZZ	572 902 1718	36- 7	AE	DS	N	C
SPAKA4693FCZZ	572 902 0929	36- 18	AE	DS		D
SPAKA6075FCZZ	572 902 1602	36- 22	AE	DJ	N	D
SPAKA6235DSZZ	572 902 1719	36-104	AH	DX	N	D
SPAKA6302FCZ1	572 902 1705	36- 17	AD	DJ	N	D
SPAKA6336FCZZ	572 902 1706	36- 2	AK	EB	N	D
SPAKA6337FCZZ	572 902 1707	36- 3	AN	EG	N	D
SPAKA6338FCZZ	572 902 1708	36- 2	AL	EB	N	D
SPAKA6339FCZZ	572 902 1709	36- 3	AN	EQ	N	D
SPAKA6345FCZZ	572 902 1713	36- 26	AE	DJ	N	D
SPAKA6346FCZZ	572 902 1714	36- 12	AD	DJ	N	D
SPAKA6384FCZZ	572 902 1721	36- 2	AL	EB	N	D
SPAKA6385FCZZ	572 902 1722	36- 3	AP	EQ	N	D
SPAKA6386FCZZ	572 902 1723	36-103	AL	EB	N	D
SPAKA6440FCZZ	572 902 1724	36-102	AL	EB	N	D
SPAKA6450FCZZ		36- 22	AD	DJ	N	D
SPAKC6334DS11		36- 1	BE	GN	N	D
SPAKC6334DS12	572 901 1931	36- 1	BU	NN	N	D
SPAKC6334DS14		36- 1	BE	GN	N	D

PARTS CODE	JAPAN ONLY ORDER CODE	NO.	PRICE R. Ex.	PRICE R. Ja.	NEW	P/R
SPAKC6334DS15	572 901 1932	36- 1	BU	NN	N	D
SPAKC6335DS11		36- 1	BE	GN	N	D
SPAKC6335DSZZ	572 901 1915	36- 1	BB	GD	N	D
SPAKC6383DS11		36- 1	BF	GN	N	D
SPAKC6383DSZZ	572 901 1922	36- 1	AZ	FQ	N	D
SSAKA0006UCZZ	541 906 1016	36- 30	AA	DD		C
SSAKA2440QCZZ	595 906 0005	36- 13	AB	DD		D
SSAKA3640QCZZ	595 906 0002	36- 8	AB	DD		C
SSAKA5003CCZZ	500 906 0006	36- 21	AA	DD		C
SSAKH3013CCZZ	500 906 0015	36- 29	AA	DD		C
SSAKZ0018FCZZ	572 906 0119	36- 4	AN	EG		D
【T】						
TCADS1511FCZZ	572 913 0956	36- 10	AC	DJ		D
TCADS1512FCZZ	572 913 0957	36- 10	AB	DJ		D
TCADZ1178FCZZ	572 913 0651	36- 15	AB	DJ		D
TCADZ1275FCZZ	572 913 0734	36- 24	AB	DJ		D
TCADZ1593FCZZ	572 913 0991	36-105	AC	DJ	N	D
TCADZ1595FCZZ	572 913 0993	20- 62	AC	DJ	N	C
TCADZ6015FCZZ	572 913 0988	36-101	AC	DJ	N	D
TCADZ6017FCZZ	572 913 0990	36- 10	AF	DS	N	D
TCADZ6017GHZZ		36- 10	*	*	N	D
TCAUA0770FCZZ	572 914 0035	1- 42	AB	DD		C
TCAUH1035FCZZ	572 914 0672	30- 7	AC	DJ		C
TiNSD2344GHZZ		36- 10	*	*	N	D
TiNSD2359GHZZ		36- 10	*	*	N	D
TiNSD2375GHZZ		36- 10	*	*	N	D
TiNSD2391GHZZ		36- 10	*	*	N	D
TiNSD2457GHZZ		36- 10	*	*	N	D
TiNSE2332FCZZ	572 916 2065	36- 10	BA	FX	N	D
TiNSE2333GHZZ		36- 10	*	*	N	D
TiNSE2334FCZZ	572 916 2055	36- 10	BB	GD	N	D
TiNSE2334GHZZ		36- 10	*	*	N	D
TiNSE2347FCZZ	572 916 2066	36- 10	AP	EQ	N	D
TiNSE2348GHZZ		36- 10	*	*	N	D
TiNSE2349FCZZ	572 916 2056	36- 10	AQ	EQ	N	D
TiNSE2349GHZZ		36- 10	*	*	N	D
TiNSE2363FCZZ	572 916 2057	36- 10	AM	EG	N	D
TiNSE2364GHZZ		36- 10	*	*	N	D
TiNSE2365FCZZ	572 916 2058	36- 10	AM	EG	N	D
TiNSE2365GHZZ		36- 10	*	*	N	D
TiNSE2379FCZZ	572 916 2059	36- 10	AN	EQ	N	D
TiNSE2380GHZZ		36- 10	*	*	N	D
TiNSE2381FCZZ	572 916 2060	36- 10	AN	EQ	N	D
TiNSE2381GHZZ		36- 10	*	*	N	D
TiNSE2445FCZZ	572 916 2074	36- 10	AM	EG	N	D
TiNSE2446GHZZ		36- 10	*	*	N	D
TiNSE2447FCZZ	572 916 2075	36- 10	AM	EG	N	D
TiNSE2447GHZZ		36- 10	*	*	N	D
TiNSF2336FCZZ	572 916 2067	36- 10	BA	FX	N	D
TiNSF2336GHZZ		36- 10	*	*	N	D
TiNSF2351FCZZ	572 916 2068	36- 10	AP	EQ	N	D
TiNSF2351GHZZ		36- 10	*	*	N	D
TiNSF2367FCZZ	572 916 2061	36- 10	AM	EG	N	D
TiNSF2367GHZZ		36- 10	*	*	N	D
TiNSF2383FCZZ	572 916 2062	36- 10	AN	EQ	N	D
TiNSF2383GHZZ		36- 10	*	*	N	D
TiNSF2449FCZZ	572 916 2076	36- 10	AM	EG	N	D
TiNSF2449GHZZ		36- 10	*	*	N	D
TiNSG2341GHZZ		36- 10	*	*	N	D
TiNSG2356GHZZ		36- 10	*	*	N	D
TiNSG2372GHZZ		36- 10	*	*	N	D
TiNSG2388GHZZ		36- 10	*	*	N	D
TiNSG2454GHZZ		36- 10	*	*	N	D
TiNSH2339GHZZ		36- 10	*	*	N	D
TiNSH2354GHZZ		36- 10	*	*	N	D
TiNSH2370GHZZ		36- 10	*	*	N	D
TiNSH2386GHZZ		36- 10	*	*	N	D
TiNSH2452GHZZ		36- 10	*	*	N	D
TiNSi2338GHZZ		36- 10	*	*	N	D
TiNSi2353GHZZ		36- 10	*	*	N	D
TiNSi2369GHZZ		36- 10	*	*	N	D
TiNSi2385GHZZ		36- 10	*	*	N	D
TiNSi2451GHZZ		36- 10	*	*	N	D
TiNSJ2329FCZZ	572 916 2045	36- 10	BB	GD	N	D
TiNSJ2330FCZZ	572 916 2046	36- 10	BA	FX		D
TiNSJ2331FCZZ	572 916 2047	36- 10	AV	FG	N	D
TiNSJ2362FCZZ	572 916 2063	36- 10	AK	EB	N	D
TiNSJ2378FCZZ	572 916 2064	36- 10	AS	EQ	N	D
TiNSJ2444FCZZ	572 916 2078	36- 10	AM	EG	N	D
TiNSS2337GHZZ		36- 10	*	*	N	D
TiNSS2352GHZZ		36- 10	*	*	N	D

PARTS CODE	JAPAN ONLY ORDER CODE	NO.	PRICE R. Ex.	PRICE R. Ja.	NEW	P/R
TiNSS2368GHZZ		36- 10	*	*	N	D
TiNSS2384GHZZ		36- 10	*	*	N	D
TiNSS2450GHZZ		36- 10	*	*	N	D
TiNSW2340GHZZ		36- 10	*	*	N	D
TiNSW2355GHZZ		36- 10	*	*	N	D
TiNSW2371GHZZ		36- 10	*	*	N	D
TiNSW2387GHZZ		36- 10	*	*	N	D
TiNSW2453GHZZ		36- 10	*	*	N	D
TiNSZ2342GHZZ		36- 10	*	*	N	D
TiNSZ2343GHZZ		36- 10	*	*	N	D
TiNSZ2357GHZZ		36- 10	*	*	N	D
TiNSZ2358GHZZ		36- 10	*	*	N	D
TiNSZ2373GHZZ		36- 10	*	*	N	D
TiNSZ2374GHZZ		36- 10	*	*	N	D
TiNSZ2389GHZZ		36- 10	*	*	N	D
TiNSZ2390GHZZ		36- 10	*	*	N	D
TiNSZ2455GHZZ		36- 10	*	*	N	D
TiNSZ2456GHZZ		36- 10	*	*	N	D
TLABF2705FCZZ	577 917 0006	1- 43	AB	DD		C
TLABH4186FCZZ	572 917 3188	1- 45	AE	DS		C
TLABH4746FCZZ	572 917 3691	24- 2	AH	DX	N	C
TLABH4747FCZ1	572 917 3692	20- 41	AH	DX	N	C
TLABH4747FCZZ	572 917 3749	20- 41	AE	DJ	N	C
TLABH4748FCZZ	572 917 3693	2- 26	AF	DS	N	C
TLABH4749FCZZ	572 917 3705	2- 26	AE	DJ	N	C
TLABS4306FCZZ	572 917 3307	1- 47	AC	DJ		C
TLABZ0059QSZZ	572 917 3355	1- 50	AE	DJ		C
TLABZ4047FCZZ	572 917 3041	10- 4	AC	DJ		C
〃	572 917 3041	1- 41	AC	DJ		C
TLABZ4238FCZZ	572 917 3233	10- 32	AD	DJ		C
TLABZ4239FCZZ	572 917 3308	10- 32	AD	DJ		C
TLABZ4240FCZZ	572 917 3309	10- 32	AD	DJ		C
TLABZ4335FCZZ	572 917 3385	7- 39	AB	DJ		C
TLABZ4694FCZZ	572 917 3593	1- 48	AF	DS		C
TLABZ4720FCZZ	572 917 3607	1- 49	AC	DJ		C
TLABZ4742FCZZ	572 917 3702	1- 33	AL	EB	N	C
TLABZ4753FCZZ	572 917 3695	22- 23	AA	DJ	N	C
TLABZ4754FCZZ	572 917 3696	22- 23	AA	DJ	N	C
TLABZ4755FCZZ	572 917 3697	22- 23	AA	DJ	N	C
TLABZ4756FCZZ	572 917 3698	22- 23	AB	DJ	N	C
TLABZ4759FCZZ	572 917 3699	13- 30	AH	DX	N	C
TLABZ4766FCZ1	572 917 3700	22- 3	AC	DJ	N	C
TLABZ4772FCZ1	572 917 3715	20- 50	AF	DJ	N	B
【U】						
UBATi0014FCZZ	572 932 0022	53- 31	AN	EQ		B
UBATL2033SCZZ	595 932 0026	58- 26	AK	EB		B
UCLEZ0169FCZZ	572 704 0125	20- 12	AQ	EQ	N	A
UCLEZ0170FCZZ	572 704 0126	20- 6	AK	EB	N	A
UCLEZ0171FCZ2	572 704 0127	22- 14	AX	FG	N	A
UCLEZ0172FCZ1	572 704 0128	22- 18	AQ	EQ	N	A
UKÖG-0304FCZZ	572 941 0300	36- 10	AQ	EQ	N	D
【V】						
VCAAPF0JJ107M	572 590 0055	58- 27	AF	DS		C
VCCCCZ1EH221J	595 593 1444	49- 14	AB	DD		C
〃	595 593 1444	50- 14	AB	DD		C
VCCCCZ1HH100D	521 593 0027	49- 15	AA	DD		C
VCCCCZ1HH101J	521 593 0028	50- 15	AA	DD		C
〃	521 593 0028	58- 28	AA	DD		C
VCCCCZ1HH150J	521 593 0029	49- 16	AA	DD		C
〃	521 593 0029	52- 25	AA	DD		C
VCCCCZ1HH151J	596 593 1667	53- 32	AC	DD		C
VCCCCZ1HH180J	578 593 0186	51- 29	AA	DD		C
VCCCCZ1HH220J	521 593 0023	51- 30	AA	DD		C
〃	521 593 0023	52- 26	AA	DD		C
〃	521 593 0023	53- 33	AA	DD		C
〃	521 593 0023	58- 29	AA	DD		C
VCCCCZ1HH270J	567 593 0396	53- 34	AA	DD		C
VCCUCY1AJ105Z	596 593 0899	51- 31	AC	DD		C
VCE9EA1CW106M	572 594 0924	50- 21	AC	DD		C
VCE9GA1CW476M	572 594 0925	50- 22	AD	DD		C
VCEAEA0JW107M	541 591 5218	52- 27	AA	DD		C
VCEAGA0JW107M	541 591 5321	51- 32	AC	DD		C
VCEAGA1AW107M	585 594 0057	53- 35	AB	DD		C
VCEAGA1AW108M	597 594 0001	51- 33	AC	ZT		C
VCEAGA1AW476M	572 594 0061	52- 28	AA	DD		C
〃	572 594 0061	53- 36	AA	DD		C
〃	572 594 0061	55- 14	AA	DD		C
VCEAGA1AW477M	541 591 5323	51- 34	AB	DD		C
〃	541 591 5323	52- 29	AB	DD		C
VCEAGA1CW106M	541 591 5281	52- 30	AA	DD		C
〃	541 591 5281	55- 15	AA	DD		C

PARTS CODE	JAPAN ONLY ORDER CODE	NO.	PRICE R. Ex.	PRICE R. Ja.	NEW	P/R
VCEAGA1CW107M	541 591 5089	52- 31	AC	DD		C
VCEAGA1HW224M	501 591 5002	52- 32	AA	DD		C
VCEAGA1VW107M	541 591 5325	52- 33	AB	DD		C
VCEAGA1VW227M	572 594 0086	52- 34	AB	DD		C
VCEAGU1VW108M	585 594 0059	55- 16	AE	DX		C
VCEAJU1CW476M	596 594 0062	54- 6	AB	DD		C
VCEAPH1VC225M	567 594 0130	58- 30	AC	DD		C
VCEAPS1AC227M	572 594 0923	58- 31	AD	DJ		C
VCEAPS1CC106M	588 594 0085	49- 17	AC	DD		C
〃	588 594 0085	58- 32	AC	DD		C
VCEAPS1CC226M	593 594 0584	58- 33	AC	DJ		C
VCEAPS1CC476M	567 594 0128	58- 34	AC	DJ		C
VCEAPS1HC475M	567 594 0132	49- 18	AC	DJ		C
VCEAPZ1EW107M	588 594 0089	49- 19	AD	DJ		C
〃	588 594 0089	58- 35	AD	DJ		C
VCEAPZ1EW476M	594 594 0040	49- 20	AE	DJ		C
VCEAZA1AW477M	572 594 0828	53- 37	AC	DD		C
VCEAZA1EW476M	578 594 0148	50- 16	AC	DD		C
VCEAZA1HW105M	594 594 0295	50- 17	AB	DD		C
VCEAZA1HW225M	594 594 0291	50- 87	AB	DD		C
VCEAZA1HW226M	578 594 0178	50- 18	AC	DD		C
VCEAZA1HW334M	594 594 0294	50- 19	AB	DD		C
VCEAZA1HW475M	572 594 0761	50- 20	AB	DD		C
VCEAZA1VW476M	578 594 0149	55- 17	AC	DD		C
VCEAZU0JW338M	572 594 0926	51- 36	AE	DJ		C
VCEAZU1VW106M	578 594 0140	51- 35	AB	DD		C
VCEAZU1VW477M	572 594 0655	51- 37	AD	DJ		C
VCFYDA1HA104J	572 596 0404	49- 21	AC	DD		C
VCFYDA1HA105J	572 596 0405	49- 22	AE	DJ		C
〃	572 596 0405	50- 88	AE	DJ		C
VCFYDA1HA333J	572 596 0406	49- 23	AC	DD		C
VCFYDA1HA474J	595 596 0218	49- 24	AD	DJ		C
VCFYJU2AA824K	572 596 0377	50- 89	AF	DS		C
VCFYJU2EA105K	595 596 0062	50- 23	AE	DS		C
VCFYJU2GA473K	595 596 0091	50- 90	AC	DD		C
VCFYJU2JA103K	595 596 0093	56- 9	AC	DD		C
VCKYCY1EB104K	596 593 1153	53- 38	AG	DX		C
VCKYCY1HB223K	595 593 1641	51- 38	AC	DD		C
VCKYCY1HF223Z	594 593 0072	52- 35	AA	DD		C
VCKYCZ1AB333K	595 593 1674	50- 91	AB	DD		C
VCKYCZ1AF224Z	572 593 0355	49- 25	AC	DD		C
VCKYCZ1CB103K	595 593 1450	49-103	AA	DD		C
VCKYCZ1CF104Z	521 593 0017	49- 26	AB	DD		C
〃	521 593 0017	51- 39	AB	DD		C
〃	521 593 0017	52- 36	AB	DD		C
〃	521 593 0017	53- 39	AB	DD		C
〃	521 593 0017	58- 37	AB	DD		C
VCKYCZ1EB103K	567 593 0417	53- 40	AB	DD		C
VCKYCZ1EB472K	521 593 0054	49- 27	AA	DD		C
〃	521 593 0054	52- 37	AA	DD		C
VCKYCZ1EF223Z	567 593 0398	56- 10	AA	DD		C
VCKYCZ1HB102K	521 593 0030	49- 28	AA	DD		C
〃	521 593 0030	50- 25	AA	DD		C
〃	521 593 0030	51- 40	AA	DD		C
〃	521 593 0030	52- 38	AA	DD		C
〃	521 593 0030	53- 41	AA	DD		C
〃	521 593 0030	55- 18	AA	DD		C
〃	521 593 0030	58- 38	AA	DD		C
VCKYCZ1HB222K	521 593 0032	50- 92	AA	DD		C
〃	521 593 0032	55- 19	AA	DD		C
VCKYCZ1HB471K	521 593 0033	49- 29	AA	DD		C
〃	521 593 0033	50- 26	AA	DD		C
〃	521 593 0033	53- 42	AA	DD		C
〃	521 593 0033	55- 20	AA	DD		C
〃	521 593 0033	56- 11	AA	DD		C
VCKYCZ1HF103Z	567 593 0374	52- 39	AA	DD		C
〃	567 593 0374	58- 39	AA	DD		C
VCKYPU1EB223Z	572 593 0312	54- 7	AB	DD		C
VCKYPU3SD150K	572 593 0418	56- 12	AC	DD		C
VCKYTQ0JF106Z	596 593 1290	52- 40	AD	DJ		C
VCQYNU1HM223K	595 596 0107	50- 93	AA	DD		C
VHD0R5G4B42-1	595 570 0003	50- 27	AF	DS		B
VHD10DDA40+-1	572 570 0569	50- 29	AD	DJ		B
VHD1SS133//-1	541 570 5063	49- 32	AA	DD		B
〃	541 570 5063	50- 28	AA	DD		B
VHD1SS355//-1	595 570 0304	53- 43	AB	DJ		B
VHDDAN202U/-1	500 570 5015	51- 41	AB	DD		B
〃	500 570 5015	52- 41	AB	DD		B
〃	500 570 5015	53- 44	AB	DD		B
VHDDAP202U/-1	500 570 5023	51- 42	AB	DD		B
〃	500 570 5023	52- 42	AB	DD		B

PARTS CODE	JAPAN ONLY ORDER CODE	NO.	PRICE R. Ex.	PRICE R. Ja.	NEW	P/R
VHDDAP202U/-1	500 570 5023	53- 45	AB	DD		B
VHDDSM1D1//-1	572 570 0366	55- 21	AB	DJ		B
VHDDSS133//-1	500 570 5006	51- 43	AA	DD		B
〃	500 570 5006	52- 43	AA	DD		B
〃	500 570 5006	54- 8	AA	DD		B
〃	500 570 5006	55- 22	AA	DD		B
VHDM1FS4///-1	521 570 0024	52- 44	AD	DJ		B
VHDMA704A//-1	572 570 0328	51- 44	AC	DJ		B
〃	572 570 0328	52- 45	AC	DJ		B
VHDRA13++++-1	572 570 0560	51- 45	AD	DJ		B
〃	572 570 0560	52- 46	AD	DJ		B
〃	572 570 0560	55- 23	AD	DJ		B
VHDRB051L40-1	594 570 0251	58- 40	AE	DS		B
VHDRB451F//-1	594 570 0199	53- 46	AD	DS		B
〃	594 570 0199	58- 41	AD	DS		B
VHDRB751V40-1	521 570 0013	49- 31	AD	DJ		B
VHEHZS2C1//-1	595 571 0250	50- 30	AB	DJ		B
VHEHZS3B1//-1	595 571 0002	52- 47	AC	DJ		B
VHEMTZJ33B+-1	572 571 0264	50- 31	AC	DJ		B
VHEMTZJ4R7B-1	595 571 0272	50- 32	AC	DJ		B
VHEMTZJ8.2B-1	595 571 0265	50- 33	AB	DJ		B
VHERD22FB//-1	500 571 0074	51- 46	AD	DJ		B
VHERD5.1EB2-1	595 571 0006	49- 33	AA	DD		B
VHH103AT-2/-1	595 572 0003	51- 47	AG	DS		B
〃	595 572 0003	56- 13	AG	DS		B
VHHMSMDC014-1	596 572 0031	51- 48	AF	DS		B
VHi107AP66C-1	572 573 2908	58- 42	BX	TF		B
VHi1085CZAD-1	572 573 2909	58- 43	AH	DX		B
VHi161622FH1C	572 573 2848	52- 48	BA	FX		B
VHi2309SC1H-1	572 573 2569	58- 44	AT	EZ		B
VHi23S09SC+-1	572 573 2849	53- 47	AV	FG		B
VHi28F081L07F	572 573 2902	31- 26	AY	FQ	N	E
VHi28F081L11F	572 573 2973	38- 24	AY	FQ	N	E
VHi28F082L06S	572 573 2912	37- 38	BF	GN	N	E
VHi28F161L01F	572 573 2903	6- 8	BA	FX	N	C
VHi28F162L01F	572 573 2904	6- 10	BD	GN	N	C
VHi28F322L22F	572 573 2905	34- 22	BH	HC	N	C
VHi28F322L23F	572 573 2906	34- 22	BH	HC	N	C
VHi28F322L32F	572 573 2974	38- 23	BG	GT	N	E
VHi28F322L33F		38- 22	BM	HR	N	E
VHi29F04-01FC	572 573 2494	49- 39	AX	FG		B
VHi58C256AP-1	572 573 2235	53- 48	BB	GD		B
VHi60852ATB-1	572 573 2910	58- 45	AX	FG		B
VHi61LV6416-1	578 573 1169	52- 49	AX	FG		B
VHi65946P110C	572 573 2874	51- 49	BB	GD		B
VHi65949P03-1	572 573 2875	53- 50	BE	GN		B
VHi74HC132M-1	572 573 2497	49- 57	AF	DS		B
VHi74HC74AM-1	572 573 2484	49- 58	AE	DJ		B
VHi74LCX04M-1	578 573 1174	49- 59	AE	DJ		B
VHi74LCX08MTC	572 573 2090	52- 50	AE	DJ		B
〃	572 573 2090	58- 46	AE	DJ		B
VHi74LCX14MTC	572 573 2091	52- 51	AE	DJ		B
〃	572 573 2091	53- 51	AE	DJ		B
〃	572 573 2091	58- 47	AE	DJ		B
VHi74LCX244MT	572 573 2092	52- 52	AM	DX		B
〃	572 573 2092	53- 52	AM	DX		B
〃	572 573 2092	58- 48	AM	DX		B
VHi74LCX245MT	572 573 2093	52- 53	AM	DX		B
〃	572 573 2093	53- 53	AM	DX		B
〃	572 573 2093	58- 49	AM	DX		B
VHi74LVX08M-1	578 573 1155	49- 60	AE	DJ		B
VHi74LVX14M-1	572 573 2485	49- 61	AE	DJ		B
VHi74LVX16128	578 573 1048	58- 50	AP	EQ		B
VHi74VHC08/-1	572 573 1476	52- 54	AE	DS		B
VHi74VHC32MTC	572 573 2097	51- 50	AD	DJ		B
VHi755B300E-1	572 573 2911	58- 51	BZ	TF		B
VHi7SZ125M5-1	572 573 2486	58- 52	AE	DS		B
VHi85672011-1	572 573 2852	53- 54	BV	RB		B
VHi90C363A+-1	572 573 2854	52- 56	AU	FG		B
VHi90CF364A-1	572 573 2853	53- 55	AU	FG		B
VHiBU4066BCF1	595 573 3115	50- 34	AD	DJ		B
VHiCY25811S-1	572 573 2869	53- 56	AN	EG		B
VHiCY25814S-1	572 573 2870	53- 58	AN	EG		B
VHiD3032+++-1	572 573 2925	58- 55	AX	FG	N	B
VHiD8501A++-1	572 573 2924	58- 56	BS	MW	N	B
VHiEES02L400P	572 573 2498	49- 34	AG	DX		B
VHiEES04L400P	572 573 2414	58- 57	AG	DX		B
VHiH8D3063+-1	578 573 1163	50- 95	AW	FG		B
VHiH8S2320+-1	578 573 1145	51- 52	AY	FQ		B
〃	578 573 1145	52- 58	AY	FQ		B
VHiHC151MTC-1	572 573 2837	51- 53	AE	DJ		B

PARTS CODE	JAPAN ONLY ORDER CODE	NO.	PRICE R. Ex.	PRICE R. Ja.	NEW	P/R
VHiHG73C095-1	572 573 2459	52- 59	AY	FQ		B
VHiHi207ECB-1	578 573 1292	53- 59	AN	EQ		B
VHiHN58V65A-1	572 573 2288	51- 54	AW	FG		B
〃	572 573 2288	52- 60	AW	FG		B
VHiLCX244SJ-1	572 573 2481	49- 36	AG	DX		B
VHiLCX574MT-1	572 573 2871	53- 60	AF	DS		B
VHiLCX74MTC-1	572 573 2444	53- 61	AE	DJ		B
VHiLHF80J01-1	595 573 6174	53- 62	AX	FG		B
VHiLM111718-1	578 573 1166	49- 37	AH	DX		B
VHiLM324D++-1	572 573 2445	51- 55	AE	DJ		B
VHiLM339D++-1	572 573 2446	51- 56	AE	DJ		B
VHiLM358DR+-1	578 573 1112	52- 61	AF	DS		B
VHiLM393D++-1	572 573 2447	53- 63	AE	DJ		B
VHiLM98513+-1	572 573 2872	52- 62	AY	FQ		B
VHiM3032ATC-1	572 573 2907	53- 64	AT	EZ	N	B
VHiM51957BFP1	567 573 0126	51- 57	AH	DX		B
〃	567 573 0126	52- 63	AH	DX		B
〃	567 573 0126	53- 65	AH	DX		B
VHiM87J8310-1	572 573 2841	52- 64	BQ	LP		B
VHiM87L4240-1	572 573 2842	52- 65	BG	GT		B
VHiM87M1290-1	572 573 2843	52- 66	BZ	TF		B
VHiMAX3225E-1	572 573 2482	49- 38	AT	EZ		B
〃	572 573 2482	53- 66	AT	EZ		B
VHiMBLV064N-1	572 573 2873	52- 67	BA	FX		B
VHiMN195004-1	572 573 2468	49- 40	BN	HZ		B
VHiMTD2007F-1	567 573 1405	52- 68	AU	EZ		B
VHiNJM2113M-1	595 573 3547	49- 42	AG	DS		B
VHiNJM2903M/-	572 573 0025	58- 60	AD	DJ		B
VHiNJM4558MF1	572 573 1736	49- 43	AE	DJ		B
〃	572 573 1736	50- 35	AE	DJ		B
VHiNJU4051M-1	595 573 3786	49- 44	AG	DX		B
VHiNJU4052BMF	578 573 0533	49- 45	AG	DS		B
VHiNJU4053BMF	578 573 0363	49- 46	AG	DS		B
VHiNJU6356E-1	572 573 1737	53- 67	AK	DX		B
〃	572 573 1737	58- 61	AK	DX		B
VHiPM2500++-1	572 573 2409	53- 68	BP	LP		B
VHiPST591CMT1	595 573 2858	49- 47	AE	DS		B
VHiPST591iM-1	585 573 1696	49- 48	AG	DS		B
VHiPST598DN-1	572 573 2472	58- 62	AF	DS		B
VHiPST598iN-1	523 573 0081	58- 63	AF	DS		B
VHiPST994C+-1	572 573 2496	49- 49	AG	DS		B
VHiR1117D25-1	572 573 2900	58- 64	AG	DS		B
VHiSD4M16L1-1	572 573 2410	49- 50	AZ	FX		B
VHiSD8M16L1-1	572 573 2460	52- 70	BB	GD		B
〃	572 573 2460	53- 69	BB	GD		B
VHiSH770910-1	578 573 1168	49- 51	BH	GX		B
〃	578 573 1168	53- 70	BH	GX		B
VHiSLA7024MT/	572 573 1217	55- 24	AS	EQ		B
VHiSLA7031M-1	572 573 2844	51- 59	AQ	EQ		B
〃	572 573 2844	55- 25	AQ	EQ		B
VHiSLA7032M-1	572 573 2897	51- 60	AR	EQ		B
VHiSR1024-7LL	572 573 2461	53- 71	AU	EZ		B
VHiSR1024L15J	572 573 2483	49- 52	AU	FG		B
VHiTA31076F-1	572 573 1739	50- 36	AH	DX		B
VHiTA7291AS-1	572 573 2570	51- 61	AG	DX		B
VHiTD62003AF/	572 573 2085	51- 62	AE	DS		B
〃	572 573 2085	52- 71	AE	DS		B
VHiTD62503F/-	572 573 0907	49- 54	AG	DX		B
〃	572 573 0907	52- 72	AG	DX		B
VHiTHS56F//-1	595 573 3362	50- 97	AS	EZ		B
VHiTR88017S-1	572 573 2469	49- 55	BA	FX		B
VHiUPD65946-1	572 573 2470	49- 56	BB	GD		B
VHiUPD85632-1	572 573 2845	52- 73	BM	HV		B
VHiUPD85658-1	572 573 2846	52- 74	BV	RB		B
VHiVC4051MT-1	572 573 2856	51- 63	AF	DS		B
VHiVHC14MTC-1	572 573 2847	51- 64	AD	DJ		B
VHiVHCT14AM-1	578 573 1092	51- 65	AE	DJ		B
VHiVHCT244T-1	595 573 5596	55- 26	AK	DX		B
VHiVT574MTC-1	572 573 2857	51- 67	AF	DS		B
VHP1LHEE-002A	578 574 0042	49- 62	AC	DJ		B
VHP1LHLE-002A	578 574 0043	54- 9	AC	DJ		B
VHPGP1A22LC-1	572 574 0100	6- 15	AK	EB		B
VHPGP1A71L3-1	572 568 0153	11- 22	AG	DS	N	B
〃	572 568 0153	13- 5	AG	DS	N	B
〃	572 568 0153	15- 28	AG	DS	N	B
〃	572 568 0153	17- 3	AG	DS	N	B
〃	572 568 0153	21- 25	AG	DS	N	B
〃	572 568 0153	23- 15	AG	DS	N	B
〃	572 568 0153	25- 9	AG	DS	N	B
〃	572 568 0153	28- 4	AG	DS	N	B
〃	572 568 0153	28- 40	AG	DS	N	B

PARTS CODE	JAPAN ONLY ORDER CODE	NO.	PRICE R.		NEW	P/R
			Ex.	Ja.		
VHPGP1A71L3-1	572 568 0153	31- 32	AG	DS	N	B
VHPGP2TC21//1	572 568 0107	20- 1	BE	GN		B
VHPGP3A38//-1	572 574 0040	6- 11	AH	DX		B
VHPLT1F67AF-1	595 574 0220	52- 75	AC	DJ		B
〃	595 574 0220	53- 72	AC	DJ		B
VHPLT9400E/-1	572 574 0310	54- 10	AK	EB		B
VHPPC814X1+-1	572 568 0154	50- 37	AD	DJ		B
VHPPC817D//-1	596 574 0016	50- 38	AD	DJ		B
VHPTLP624-1BV	572 574 0308	50- 39	AG	DX		B
VHVDSS-401M//	578 577 0027	50- 40	AH	DX		B
VHVTN07G101-1	595 577 0103	50- 42	AB	DJ		B
VHVTNR5V471K/	578 577 0026	50- 41	AD	DJ		B
VRD-HT2EY100J	595 581 0453	50- 43	AA	DD		C
VRD-HT2EY102J	507 581 5010	54- 11	AA	DD		C
VRD-HT2EY104J	505 581 5003	50- 44	AA	DD		C
〃	505 581 5003	55- 28	AA	DD		C
VRD-HT2EY111J	588 581 0061	54- 12	AA	DD		C
VRD-HT2EY124J	595 581 0454	50- 45	AA	DD		C
VRD-HT2EY151J	541 581 5470	54- 13	AA	DD		C
VRD-HT2EY164J	588 581 0069	50- 46	AA	DD		C
VRD-HT2EY183J	571 581 0415	50- 47	AA	DD		C
VRD-HT2EY204J	507 581 5013	50- 48	AA	DD		C
VRD-HT2EY224J	579 581 0158	50- 49	AA	DD		C
VRD-HT2EY242J	571 581 0369	55- 27	AA	DD		C
VRD-HT2EY300J	588 581 0088	50- 50	AA	DD		C
VRD-HT2EY302J	581 581 0003	54- 14	AA	DD		C
VRD-HT2EY303J	579 581 0123	50- 52	AA	DD		C
VRD-HT2EY471J	507 581 5017	50- 53	AA	DD		C
VRD-HT2EY472J	507 581 5018	50- 98	AA	DD		C
VRD-HT2EY473J	507 581 5019	54- 15	AA	DD		C
〃	507 581 5019	55- 38	AA	DD		C
VRD-HT2EY562J	595 581 0480	55- 29	AA	DD		C
VRD-HT2EY682J	571 581 0452	50- 55	AA	DD		C
〃	571 581 0452	54- 16	AA	DD		C
VRD-HT2EY751J	507 581 5045	49- 63	AA	DD		C
VRD-HT2EY910J	577 581 0025	50- 56	AA	DD		C
VRD-HT2EY911J	588 581 0035	54- 17	AA	DD		C
VRD-HT2HY471J	579 581 0125	49- 64	AA	DD		C
VRD-RC2EY103J	500 581 5014	56- 15	AA	DD		C
VRS-CY1JD270J	521 581 0007	51- 69	AA	DD		C
VRS-CZ1JD000J	521 581 0082	49- 65	AA	DD		C
〃	521 581 0082	50- 57	AA	DD		C
〃	521 581 0082	51- 70	AA	DD		C
〃	521 581 0082	52- 76	AA	DD		C
〃	521 581 0082	53- 73	AA	DD		C
〃	521 581 0082	58- 67	AA	DD		C
VRS-CZ1JD100J	567 581 0524	53- 74	AA	DD		C
〃	567 581 0524	58- 68	AA	DD		C
VRS-CZ1JD101J	521 581 0137	49- 67	AA	DD		C
〃	521 581 0137	51- 71	AA	DD		C
〃	521 581 0137	52- 77	AA	DD		C
〃	521 581 0137	53- 75	AA	DD		C
〃	521 581 0137	56- 16	AA	DD		C
VRS-CZ1JD102J	521 581 0093	49- 68	AA	DD		C
〃	521 581 0093	50- 58	AA	DD		C
〃	521 581 0093	51- 72	AA	DD		C
〃	521 581 0093	52- 78	AA	DD		C
〃	521 581 0093	53- 76	AA	DD		C
〃	521 581 0093	55- 30	AA	DD		C
〃	521 581 0093	58- 69	AA	DD		C
VRS-CZ1JD103F	521 581 0127	49- 69	AA	DD		C
〃	521 581 0127	51- 73	AA	DD		C
〃	521 581 0127	52- 79	AA	DD		C
VRS-CZ1JD103J	521 581 0085	49- 70	AA	DD		C
〃	521 581 0085	50- 59	AA	DD		C
〃	521 581 0085	51- 74	AA	DD		C
〃	521 581 0085	52- 80	AA	DD		C
〃	521 581 0085	53- 77	AA	DD		C
〃	521 581 0085	58- 70	AA	DD		C
VRS-CZ1JD104F	521 581 0253	51- 75	AA	DD		C
VRS-CZ1JD104J	521 581 0083	49- 71	AA	DD		C
〃	521 581 0083	51- 76	AA	DD		C
VRS-CZ1JD105J	521 581 0094	51- 77	AA	DD		C
〃	521 581 0094	52- 81	AA	DD		C
〃	521 581 0094	53- 78	AA	DD		C
〃	521 581 0094	58- 71	AA	DD		C
VRS-CZ1JD113F	567 581 0525	51- 78	AA	DD		C
VRS-CZ1JD113J	521 581 0095	50- 60	AA	DD		C
VRS-CZ1JD121J	567 581 0526	53- 79	AA	DD		C
VRS-CZ1JD122J	521 581 0096	52- 83	AA	DD		C
VRS-CZ1JD123J	521 581 0097	49- 72	AA	DD		C

PARTS CODE	JAPAN ONLY ORDER CODE	NO.	PRICE R.		NEW	P/R
			Ex.	Ja.		
VRS-CZ1JD123J	521 581 0097	52- 84	AA	DD		C
VRS-CZ1JD133F	572 581 2079	49- 73	AA	DD		C
VRS-CZ1JD133J	572 581 2155	52- 85	AA	DD		C
VRS-CZ1JD151J	567 581 0527	50- 99	AA	DD		C
〃	567 581 0527	53- 80	AA	DD		C
VRS-CZ1JD152J	521 581 0175	49- 74	AA	DD		C
〃	521 581 0175	52- 86	AA	DD		C
〃	521 581 0175	53- 81	AA	DD		C
〃	521 581 0175	58- 73	AA	DD		C
VRS-CZ1JD153F	521 581 0290	49- 75	AB	DD		C
VRS-CZ1JD153J	567 581 0528	50- 61	AA	DD		C
VRS-CZ1JD162J	578 581 0333	51- 79	AA	DD		C
VRS-CZ1JD182J	521 581 0189	53- 82	AA	DD		C
VRS-CZ1JD183J	521 581 0102	49- 76	AA	DD		C
〃	521 581 0102	50- 62	AA	DD		C
VRS-CZ1JD201J	521 581 0254	51- 80	AA	DD		C
〃	521 581 0254	58- 74	AA	DD		C
VRS-CZ1JD202J	567 581 0695	51- 81	AA	DD		C
〃	567 581 0695	53- 83	AA	DD		C
VRS-CZ1JD203F	521 581 0131	52- 88	AA	DD		C
VRS-CZ1JD203J	567 581 0530	49- 77	AA	DD		C
〃	567 581 0530	50- 63	AA	DD		C
〃	567 581 0530	52- 89	AA	DD		C
VRS-CZ1JD220J	567 581 0532	52- 90	AA	DD		C
〃	567 581 0532	58- 75	AA	DD		C
VRS-CZ1JD221J	567 581 0533	51- 82	AA	DD		C
〃	567 581 0533	52- 91	AA	DD		C
VRS-CZ1JD222J	567 581 0534	49- 78	AA	DD		C
〃	567 581 0534	50-100	AA	DD		C
VRS-CZ1JD223J	521 581 0104	50- 64	AA	DD		C
VRS-CZ1JD242J	521 581 0219	52- 92	AA	DD		C
〃	521 581 0219	55- 32	AA	DD		C
VRS-CZ1JD243J	521 581 0190	50- 65	AA	DD		C
VRS-CZ1JD271J	572 581 2153	53- 84	AA	DD		C
〃	572 581 2153	55- 33	AA	DD		C
VRS-CZ1JD272J	567 581 0634	50- 66	AA	DD		C
〃	567 581 0634	51- 84	AA	DD		C
〃	567 581 0634	53- 85	AA	DD		C
VRS-CZ1JD273F	572 581 2080	49- 79	AA	DD		C
〃	572 581 2080	51- 85	AA	DD		C
VRS-CZ1JD273J	572 581 2081	49- 80	AA	DD		C
〃	572 581 2081	50- 67	AA	DD		C
VRS-CZ1JD302J	572 581 2072	49- 81	AA	DD		C
VRS-CZ1JD303J	572 581 2074	51- 86	AA	DD		C
〃	572 581 2074	52- 93	AA	DD		C
VRS-CZ1JD330J	521 581 0202	49- 82	AA	DD		C
〃	521 581 0202	51- 87	AA	DD		C
〃	521 581 0202	52- 94	AA	DD		C
〃	521 581 0202	58- 76	AA	DD		C
VRS-CZ1JD331J	567 581 0537	50-101	AA	DD		C
〃	567 581 0537	52- 95	AA	DD		C
VRS-CZ1JD332F	521 581 0193	52- 96	AA	DD		C
VRS-CZ1JD332J	521 581 0107	50- 68	AA	DD		C
〃	521 581 0107	58- 77	AA	DD		C
VRS-CZ1JD333J	521 581 0124	49- 83	AA	DD		C
〃	521 581 0124	53- 86	AA	DD		C
VRS-CZ1JD362J	521 581 0284	52- 97	AA	DD		C
VRS-CZ1JD363J	567 581 0616	49- 84	AA	DD		C
〃	567 581 0616	50-102	AA	DD		C
VRS-CZ1JD391J	521 581 0203	51- 88	AA	DD		C
VRS-CZ1JD393F	572 581 2082	49- 85	AA	DD		C
VRS-CZ1JD393J	521 581 0285	49- 86	AA	DD		C
〃	521 581 0285	50-103	AA	DD		C
VRS-CZ1JD470J	521 581 0170	52- 98	AA	DD		C
〃	521 581 0170	53- 87	AA	DD		C
〃	521 581 0170	58- 78	AA	DD		C
VRS-CZ1JD471J	567 581 0617	49- 87	AA	DD		C
〃	567 581 0617	52- 99	AA	DD		C
〃	567 581 0617	53- 88	AA	DD		C
VRS-CZ1JD472F	572 581 2062	52-100	AA	DD		C
VRS-CZ1JD472J	521 581 0088	49- 88	AA	DD		C
〃	521 581 0088	50-104	AA	DD		C
〃	521 581 0088	51- 89	AA	DD		C
〃	521 581 0088	52-101	AA	DD		C
〃	521 581 0088	53- 89	AA	DD		C
VRS-CZ1JD473J	521 581 0109	49- 89	AA	DD		C
〃	521 581 0109	51- 90	AA	DD		C
〃	521 581 0109	52-102	AA	DD		C
〃	521 581 0109	53- 90	AA	DD		C
〃	521 581 0109	55- 34	AA	DD		C
VRS-CZ1JD512J	578 581 0332	50- 70	AA	DD		C

PARTS CODE	JAPAN ONLY ORDER CODE	NO.	PRICE R. Ex.	PRICE R. Ja.	NEW	P/R
VRS-CZ1JD513J	572 581 2083	49- 90	AA	DD		C
〃	572 581 2083	50- 71	AA	DD		C
VRS-CZ1JD560J	572 581 2084	49- 91	AA	DD		C
VRS-CZ1JD621J	572 581 2064	50- 72	AA	DD		C
VRS-CZ1JD622J	578 581 0317	51- 91	AA	DD		C
VRS-CZ1JD680J	572 581 2065	53- 91	AA	DD		C
VRS-CZ1JD682J	521 581 0226	49- 92	AA	DD		C
VRS-CZ1JD683J	567 581 0543	49- 93	AA	DD		C
〃	567 581 0543	50-105	AA	DD		C
VRS-CZ1JD753J	521 581 0198	49- 94	AA	DD		C
VRS-CZ1JD821J	572 581 2073	50-106	AA	DD		C
〃	572 581 2073	51- 93	AA	DD		C
VRS-CZ1JD822J	572 581 2066	50-107	AA	DD		C
VRS-CZ1JD823J	572 581 2067	58- 79	AA	DD		C
VRS-CZ1JD912J	572 581 2086	49- 95	AA	DD		C
VRS-CZ1JD913J	521 581 0199	49- 96	AA	DD		C
VRS-HT3DA1R0J	567 581 0073	55- 35	AB	DD		C
VRS-HT3DAR51J	572 581 2234	52-105	AC	DD		C
VRS-RA3AA202J	572 581 1845	50- 74	AB	DD		C
VRS-RA3AA472J	572 581 1846	50-108	AB	DD		C
VRS-TP2BD1R0J	585 581 0486	51- 94	AA	DD		C
VS2SA1576A/-1	521 576 0072	51- 96	AB	DJ		B
VS2SA1807-P-1	595 576 0368	50- 76	AE	DS		B
VS2SB1197//-1	571 576 0349	52-106	AC	DJ		B
VS2SB1198K/-1	572 576 0510	53- 92	AC	DJ		B
VS2SC1740SR-1	595 576 0048	54- 18	AB	DD		B
VS2SC2412K/-1	500 576 5005	51- 97	AB	DD		B
〃	500 576 5005	53- 93	AB	DD		B
VS2SC2412KS-1	507 576 5010	50- 77	AB	DD		B
VS2SC3415-P-1	595 576 0378	50- 78	AP	EQ		B
VS2SD1266A0-1	572 576 0505	50- 79	AF	DS		B
VS2SD1857A+-1	572 576 0604	56- 17	AB	DJ		B
VS2SD592A//-1	572 576 0462	49-100	AE	DJ		B
VS2SD592A-S-1	595 576 0471	50- 80	AK	DX		B
VS2SJ243///-1	521 576 0057	53- 94	AD	DJ		B
VSDTA114EUA-1	594 576 0224	49- 97	AC	DJ		B
〃	594 576 0224	52-107	AC	DJ		B
VSDTA114YUA-1	596 576 0538	51- 98	AC	DJ		B
VSDTA144EUA-1	596 576 0539	51- 99	AC	DJ		B
VSDTC114EK/-1	595 576 0038	58- 80	AB	DD		B
VSDTC114EUA-1	594 576 0225	49- 98	AC	DJ		B
VSDTC114YK/-1	507 576 5005	58- 81	AC	ZZ		B
VSDTC114YUA-1	594 576 0248	51-100	AB	DJ		B
〃	594 576 0248	52-108	AB	DJ		B
〃	594 576 0248	53- 95	AB	DJ		B
VSDTC143ZKA-1	594 576 0231	50- 75	AC	DJ		B
VSDTC363EU+-1	572 576 0582	49- 99	AC	DJ		B
VVLLM065HB1-1	572 567 0010	4- 7	CB	TX		B
【X】						
XBBS230P08000	572 970 2308	22- 1	AA	DD		C
XBBSD30P04000	541 970 5027	20- 34	AA	DD		C
XBBSD30P06000	541 970 5028	20- 2	AA	DD		C
〃	541 970 5028	58- 82	AA	DD		C
XBBSD30P08000	571 970 0241	30- 27	AA	DD		C
XBBSD40P06000	572 970 0626	7- 3	AA	DD		C
XBBSD40P10000	577 970 0051	6- 16	AA	DD		C
XBBSD40P14000	572 970 1400	6- 12	AA	DD		C
XBBSE40P06000	572 970 1465	36- 31	AA	DD		C
XBPSD30P06KS0	541 970 0016	24- 15	AA	DD		C
〃	541 970 0016	3- 4	AA	DD		C
XBPSD30P08K00	541 970 0014	31- 30	AA	DD		C
XBPSD30P08KS0	541 970 1097	37- 21	AA	DD		C
XBPSD30P12XS0	572 970 2567	8- 4	AA	DD	N	C
XBPSD40P06K00	541 970 1038	33- 7	AA	DD		C
〃	541 970 1038	37- 9	AA	DD		C
XBPSD40P08K00	541 970 1106	31- 25	AA	DD		C
〃	541 970 1106	31- 54	AA	DD		C
XBPSD40P40XS0	572 970 1504	37- 10	AA	DD		C
XBPSE26P08000	572 970 2332	37- 42	AA	DD		C
XBPSE30P06000	541 970 0020	38- 4	AA	DD		C
XBTSE40P06000	572 970 0638	2- 24	AA	DD		C
XEBSD30P06000	578 970 0102	13- 28	AA	DD		C
〃	578 970 0102	19- 23	AA	DD		C
〃	578 970 0102	20- 7	AA	DD		C
〃	578 970 0102	24- 14	AA	DD		C
〃	578 970 0102	25- 38	AA	DD		C
XEBSD30P08000	578 970 0105	17- 26	AA	DD		C
〃	578 970 0105	18- 17	AA	DD		C
〃	578 970 0105	19- 30	AA	DD		C
〃	578 970 0105	20- 11	AA	DD		C
〃	578 970 0105	22- 17	AA	DD		C

PARTS CODE	JAPAN ONLY ORDER CODE	NO.	PRICE R. Ex.	PRICE R. Ja.	NEW	P/R
XEBSD30P08000	578 970 0105	24- 4	AA	DD		C
〃	578 970 0105	25- 24	AA	DD		C
〃	578 970 0105	28- 39	AA	DD		C
〃	578 970 0105	29- 23	AA	DD		C
〃	578 970 0105	3- 13	AA	DD		C
〃	578 970 0105	31- 49	AA	DD		C
〃	578 970 0105	8- 2	AA	DD		C
XEBSD30P10000	578 970 0106	20- 36	AA	DD		C
〃	578 970 0106	32- 18	AA	DD		C
XEBSD30P12000	572 970 0571	24- 53	AA	DD		C
XEBSD30P16000	578 970 0107	17- 5	AA	DD		C
〃	578 970 0107	31- 3	AA	DD		C
XEBSD40P08000	572 970 0587	10- 21	AA	DD		C
〃	572 970 0587	11- 24	AA	DD		C
〃	572 970 0587	11- 31	AA	DD		C
〃	572 970 0587	20- 40	AA	DD		C
〃	572 970 0587	23- 7	AA	DD		C
〃	572 970 0587	27- 31	AA	DD		C
〃	572 970 0587	30- 31	AA	DD		C
〃	572 970 0587	32- 11	AA	DD		C
〃	572 970 0587	32- 19	AA	DD		C
〃	572 970 0587	33- 13	AA	DD		C
XEBSD40P10000	572 970 0588	22- 22	AA	DD		C
〃	572 970 0588	2- 27	AA	DD		C
XEBSD40P30000	572 970 1429	1- 28	AA	DD		C
XEBSD40P35000	572 970 2564	33- 5	AC	DD	N	C
XEBSE30P06000	578 970 0082	28- 13	AA	DD		C
〃	578 970 0082	29- 3	AA	DD		C
XEBSE30P08000	595 970 0121	1- 25	AA	DD		C
〃	595 970 0121	13- 13	AA	DD		C
〃	595 970 0121	16- 29	AA	DD		C
〃	595 970 0121	16- 5	AA	DD		C
XEBSE30P10000	595 970 0122	37- 8	AA	DD		C
XEBSE30P12000	595 970 0345	37- 7	AA	DD		C
XEBSE40P08000	572 970 1505	10- 2	AA	DD		C
〃	572 970 1505	1- 4	AA	DD		C
〃	572 970 1505	16- 14	AA	DD		C
〃	572 970 1505	17- 19	AA	DD		C
〃	572 970 1505	2- 25	AA	DD		C
〃	572 970 1505	28- 35	AA	DD		C
〃	572 970 1505	4- 2	AA	DD		C
XEBSE40P10000	572 970 0575	13- 2	AA	DD		C
〃	572 970 0575	14- 22	AA	DD		C
〃	572 970 0575	15- 13	AA	DD		C
XEPSD30P05000	578 970 0091	3- 11	AA	DD		C
XEPSD30P06X00	595 970 0301	13- 17	AA	DD		C
XEPSD30P08000	595 970 0137	4- 4	AA	DD		C
XEPSD30P08X00	595 970 0136	20- 51	AA	DD		C
XEPSD40P06000	578 970 0083	7- 28	AA	DD		C
XEPSD40P40000	572 970 2572	31- 43	AC	DD	N	C
XHBS230P06000	572 970 1971	24- 17	AA	DD		C
〃	572 970 1971	25- 40	AA	DD		C
XHBS230P08000	572 970 2002	24- 3	AA	DD		C
XHBS240P08000	572 970 2004	24- 47	AB	DD		C
XHBSD30P04000	578 970 0072	24- 29	AA	DD		C
〃	578 970 0072	25- 21	AA	DD		C
〃	578 970 0072	6- 5	AA	DD		C
XHBSD30P05000	595 970 0162	38- 10	AA	DD		C
XHBSD30P06000	541 970 1017	20- 42	AA	DD		C
〃	541 970 1017	21- 15	AA	DD		C
〃	541 970 1017	23- 3	AA	DD		C
〃	541 970 1017	24- 19	AA	DD		C
〃	541 970 1017	24- 46	AA	DD		C
〃	541 970 1017	25- 31	AA	DD		C
〃	541 970 1017	26- 4	AA	DD		C
〃	541 970 1017	28- 2	AA	DD		C
〃	541 970 1017	30- 18	AA	DD		C
〃	541 970 1017	38- 1	AA	DD		C
〃	541 970 1017	6- 20	AA	DD		C
〃	541 970 1017	6- 7	AA	DD		C
〃	541 970 1017	7- 18	AA	DD		C
XHBSD30P08000	578 970 0060	38- 15	AA	DD		C
XHBSD30P08KS0	572 970 2565	31- 55	AB	DD	N	C
〃	572 970 2565	6- 2	AB	DD	N	C
〃	572 970 2565	9- 4	AB	DD	N	C
XHBSD30P10000	572 970 0530	19- 28	AA	DD		C
〃	572 970 0530	24- 31	AA	DD		C
〃	572 970 0530	25- 22	AA	DD		C
XHBSD30P14000	572 970 1532	30- 2	AA	DD		C
XHBSD40P06000	578 970 0073	29- 20	AA	DD		C
〃	578 970 0073	7- 30	AA	DD		C

PARTS CODE	JAPAN ONLY ORDER CODE	NO.	PRICE R. Ex.	PRICE R. Ja.	NEW	P/R
XHBSE30P04000	595 970 0160	34- 20	AA	DD		C
XHBSE30P06000	578 970 0070	11- 3	AA	DD		C
〃	578 970 0070	1- 31	AA	DD		C
〃	578 970 0070	31- 18	AA	DD		C
〃	578 970 0070	34- 6	AA	DD		C
〃	578 970 0070	37- 13	AA	DD		C
〃	578 970 0070	38- 27	AA	DD		C
XHBSE30P08000	595 970 0163	11- 30	AA	DD		C
〃	595 970 0163	1- 35	AA	DD		C
〃	595 970 0163	20- 13	AA	DD		C
〃	595 970 0163	2- 22	AA	DD		C
〃	595 970 0163	29- 18	AA	DD		C
〃	595 970 0163	30- 19	AA	DD		C
〃	595 970 0163	31- 36	AA	DD		C
〃	595 970 0163	31- 9	AA	DD		C
〃	595 970 0163	34- 19	AA	DD		C
〃	595 970 0163	6- 6	AA	DD		C
XHBSE40P05000	572 970 2023	37- 32	AB	DD		C
XHBSE40P08000	572 970 0539	11- 29	AA	DD		C
〃	572 970 0539	11- 32	AA	DD		C
〃	572 970 0539	12- 26	AA	DD		C
〃	572 970 0539	1- 24	AA	DD		C
〃	572 970 0539	12- 8	AA	DD		C
〃	572 970 0539	13- 29	AA	DD		C
〃	572 970 0539	17- 45	AA	DD		C
〃	572 970 0539	2- 23	AA	DD		C
〃	572 970 0539	23- 28	AA	DD		C
〃	572 970 0539	26- 2	AA	DD		C
〃	572 970 0539	27- 3	AA	DD		C
〃	572 970 0539	28- 38	AA	DD		C
〃	572 970 0539	29- 15	AA	DD		C
〃	572 970 0539	30- 22	AA	DD		C
〃	572 970 0539	31- 19	AA	DD		C
〃	572 970 0539	33- 8	AA	DD		C
〃	572 970 0539	37- 46	AA	DD		C
〃	572 970 0539	6- 21	AA	DD		C
〃	572 970 0539	9- 1	AA	DD		C
XHBSE40P10000	595 970 0167	37- 47	AA	DD		C
XHBSE40P12000	572 970 1585	16- 17	AA	DD		C
XHSSE30P10000	594 970 0122	4- 15	AA	DD		C
XJBSD40P08000	572 970 1466	5- 10	AA	DD		C
XJBSD40P12000	572 970 0570	5- 2	AA	DD		C
XJBSE40P12000	572 970 2568	1- 2	AA	DD	N	C
XRESP30−06000	541 399 5002	3- 2	AA	DD		C
XRESP40−05000	572 399 0053	7- 34	AA	DD		C
XRESP40−06000	509 399 5001	11- 9	AA	DD		C
〃	509 399 5001	12- 12	AA	DD		C
〃	509 399 5001	14- 21	AA	DD		C
〃	509 399 5001	15- 20	AA	DD		C
〃	509 399 5001	19- 6	AA	DD		C
〃	509 399 5001	20- 20	AA	DD		C
〃	509 399 5001	21- 16	AA	DD		C
〃	509 399 5001	28- 6	AA	DD		C
XRESP50−06000	572 399 0063	11- 10	AA	DD		C
〃	572 399 0063	12- 15	AA	DD		C
〃	572 399 0063	14- 8	AA	DD		C
〃	572 399 0063	15- 21	AA	DD		C
〃	572 399 0063	17- 40	AA	DD		C
〃	572 399 0063	19- 7	AA	DD		C
〃	572 399 0063	20- 32	AA	DD		C
〃	572 399 0063	25- 3	AA	DD		C
〃	572 399 0063	27- 18	AA	DD		C
〃	572 399 0063	28- 19	AA	DD		C
XRESP70−08000	571 399 0027	10- 31	AA	DD		C
〃	571 399 0027	12- 11	AA	DD		C
〃	571 399 0027	15- 4	AA	DD		C
〃	571 399 0027	16- 21	AA	DD		C
〃	571 399 0027	17- 9	AA	DD		C
〃	571 399 0027	18- 3	AA	DD		C
〃	571 399 0027	21- 2	AA	DD		C
〃	571 399 0027	24- 35	AA	DD		C
〃	571 399 0027	26- 7	AA	DD		C
〃	571 399 0027	27- 6	AA	DD		C
〃	571 399 0027	7- 14	AA	DD		C
XRESP80−08000	571 399 0029	23- 18	AA	DD		C
XWHSD30−05080	500 990 0026	24- 28	AA	DD		C
〃	500 990 0026	25- 20	AA	DD		C
XWHSD30−08100	505 990 5001	21- 11	AA	DD		C
XWHSD40−08100	541 990 0043	30- 21	AA	DD		C
XWHSE30−05080	572 990 0529	37- 44	AA	DD		C

PARTS CODE	JAPAN ONLY ORDER CODE	NO.	PRICE R. Ex.	PRICE R. Ja.	NEW	P/R
【0】						
0CW023100FZWS	572 970 2545	42- 15	AB	DJ	N	C
〃	572 970 2545	47- 13	AB	DJ	N	C
0CW030040FZWS	572 970 0889	43- 45	AA	DD		C
〃	572 970 0889	47- 26	AA	DD		C
0CW030060FZBP	572 970 0946	45- 6	AA	DD		C
0CW030060FZSW	572 970 0951	41- 45	AA	DD		C
〃	572 970 0951	47- 28	AA	DD		C
0CW030060FZTP	572 970 0952	41- 24	AA	DD		C
〃	572 970 0952	43- 31	AA	DD		C
〃	572 970 0952	44- 25	AA	DD		C
〃	572 970 0952	47- 24	AA	DD		C
0CW030060FZWS	572 970 0953	39- 29	AA	DD		C
〃	572 970 0953	41- 56	AA	DD		C
〃	572 970 0953	45- 30	AA	DD		C
〃	572 970 0953	47- 19	AA	DD		C
0CW030080FNWS	572 970 1975	41- 12	AA	DJ		C
0CW030080FZBi	572 970 1276	43- 14	AA	DJ		C
0CW030080FZWS	572 970 0960	41- 28	AA	DD		C
〃	572 970 0960	42- 3	AA	DD		C
〃	572 970 0960	45- 38	AA	DD		C
0CW040060FNBB	572 970 1625	41- 29	AB	DJ		C
0CW040060FNBi	572 970 0988	45- 22	AA	DD		C
0CW040060FZBP	572 970 1645	44- 35	AB	DJ		C
0CW040060FZTP	572 970 1002	46- 7	AA	DD		C
〃	572 970 1002	47- 21	AA	DD		C
0CW040060FZWS	572 970 1003	44- 5	AA	DD		C
0CW040080FNBi	572 970 1209	39- 17	AA	DD		C
〃	572 970 1209	45- 13	AA	DD		C
0CW040080FZSW	572 970 1211	46- 3	AA	DD		C
0CW040080FZTP	572 970 1023	39- 27	AA	DD		C
〃	572 970 1023	42- 6	AA	DD		C
0CW040080FZWS	572 970 1024	42- 11	AA	DD		C
〃	572 970 1024	46- 1	AA	DD		C
0CW040100FNiT	572 970 2547	39- 3	AB	DJ	N	C
0CW040120FZiT	572 970 2548	47- 5	AB	DJ	N	C
0CW2078P023B/	572 970 1392	42- 31	AC	DJ		C
〃	572 970 1392	45- 21	AC	DJ		C
0CW2078P086B/	572 970 1216	43- 27	AB	DD		C
〃	572 970 1216	45- 29	AB	DD		C
0CW2078P652B/	572 203 1129	43- 37	AE	DS	N	C
0CW2129P188A/	572 208 0004	43- 32	AD	DJ	N	C
0CW2158P322A/	572 970 2549	39- 19	AC	DJ	N	C
0CW2164P142A/	572 214 1313	45- 2	AE	DS		C
0CW2164P330A/	572 970 1544	41- 14	AB	DJ		C
〃	572 970 1544	43- 12	AB	DJ		C
0CW2164P340A/	572 970 1224	42- 5	AA	DD		C
0CW2164P340A1	572 970 2569	47- 8	AB	DJ	N	C
0CW2166P034B/	572 317 0005	40- 37	AC	DJ		C
0CW2185P357A/	572 970 2015	39- 14	AA	DJ		C
〃	572 970 2015	41- 6	AA	DJ		C
〃	572 970 2015	43- 49	AA	DJ		C
〃	572 970 2015	44- 16	AA	DJ		C
〃	572 970 2015	47- 9	AA	DJ		C
0CW2198P305B/	572 273 0024	45- 35	AH	DX	N	C
0CW2198P374A/	572 990 0541	45- 14	AC	DJ	N	C
0CW2205P025A/	572 413 0782	45- 17	AD	DJ	N	C
0CW2205P147A/	572 258 4181	45- 16	AG	DX	N	C
0CW2205P351A/	572 287 2343	45- 19	AU	EZ	N	C
0CW2205P360A/	572 258 4077	45- 3	AD	DJ	N	C
0CW2214P044A/	572 345 3869	45- 15	AF	DS	N	C
0CW2214P116B/	572 200 1458	47- 1	AE	DJ	N	C
0CW2214P128B/	572 203 1130	39- 13	AK	DX	N	C
0CW2214P157B/	572 258 4078	45- 36	AK	DX	N	C
0CW2214P393A/	572 373 0143	47- 27	AG	DX	N	C
0CW2214P455C/	572 258 4079	41- 23	AE	DS	N	C
〃	572 258 4079	43- 13	AE	DS	N	C
0CW2214P520B/	572 214 2314	45- 28	AU	EZ	N	C
0CW2214P575A/	572 271 0835	45- 37	BR	LP	N	A
0CW2225P312A/	572 272 0807	40- 19	AD	DJ	N	C
0CW2240P835A/	572 568 0152	41- 27	AT	EZ	N	B
〃	572 568 0152	43- 25	AT	EZ	N	B
0CW2247P326A/	572 272 0808	41- 15	AF	DS	N	C
0CW2252P620C/	572 208 0005	40- 16	AD	DJ	N	C
〃	572 208 0005	41- 19	AD	DJ	N	C
〃	572 208 0005	43- 40	AD	DJ	N	C
0CW2254P058A/	572 248 1448	41- 43	AE	DJ	N	C
0CW2254P338A/	572 214 2315	41- 44	AC	DJ	N	C
0CW2254P494A/	572 970 2551	40- 2	AB	DJ	N	C
〃	572 970 2551	41- 22	AB	DJ	N	C
〃	572 970 2551	44- 19	AB	DJ	N	C

PARTS CODE	JAPAN ONLY ORDER CODE	NO.	PRICE R. Ex.	PRICE R. Ja.	NEW	P/R
0CW2260P002A/	572 281 2303	40- 43	AE	DJ	N	C
0CW2260P457//	572 403 5314	44- 40	AP	EQ	N	C
0CW2260P458//	572 403 5315	44- 41	AP	EQ	N	C
0CW2261P023E/	572 290 2877	40- 27	AD	DJ	N	C
0CW2261P055A/	572 284 0861	40- 25	AC	DJ	N	C
0CW2268K040B/	572 203 1131	41- 42	AG	DX	N	C
0CW2268K041A/	572 203 1132	41- 13	AG	DX	N	C
0CW2268K522A/	572 630 1110	44- 6	BL	HL	N	B
0CW2268P005A/	572 273 0025	44- 15	AD	DJ	N	C
0CW2268P056//	572 240 0464	40- 11	AE	DJ	N	C
0CW2268P057//	572 240 0465	40- 3	AE	DJ	N	C
0CW2268P059//	572 284 0863	45- 18	AE	DJ	N	C
0CW2268P064//	572 284 0864	42- 17	AG	DX	N	C
0CW2268P065//	572 281 2304	42- 18	AG	DX	N	C
0CW2268P066//	572 281 2305	42- 25	AH	DX	N	C
0CW2268P069//	572 273 0026	46- 11	AD	DJ	N	C
0CW2268P071//	572 273 0027	41- 8	AE	DJ	N	C
0CW2268P073//	572 281 2306	41- 21	AD	DJ	N	C
0CW2268P076//	572 217 0129	46- 12	AD	DJ	N	C
//	572 217 0129	47- 37	AD	DJ	N	C
0CW2268P076B/	572 217 0130	40- 51	AD	DJ	N	C
0CW2268P078//	572 284 0865	43- 17	AE	DS	N	C
0CW2268P083//	572 284 0866	42- 4	AF	DS	N	C
0CW2268P084//	572 203 1133	39- 5	AF	DS	N	C
0CW2268P085//	572 281 2307	39- 10	AE	DJ	N	C
0CW2268P110//	572 505 0013	45- 25	AH	DX	N	C
0CW2268P145//	572 258 4080	47- 23	AG	DS	N	C
0CW2268P146//	572 231 0584	45- 31	AP	EQ	N	C
0CW2268P170//	572 258 4081	39- 11	AE	DS	N	C
0CW2268P217//	572 290 2878	42- 21	AK	EB	N	C
0CW2268P303//	572 287 2344	41- 48	BA	FX	N	C
0CW2268P335//	572 258 4082	42- 33	AD	DJ	N	C
0CW2268P336//	572 403 5196	41- 47	AD	DJ	N	C
0CW2268P344//	572 316 0417	42- 24	AP	EQ	N	C
0CW2268P352//	572 258 4083	43- 16	AD	DJ	N	C
0CW2268P354//	572 258 4084	41- 16	AG	DX	N	C
0CW2268P360//	572 258 4085	44- 3	AD	DJ	N	C
0CW2268P401//	572 345 3870	41- 50	AG	DS	N	C
0CW2268P402//	572 345 3871	46- 2	AK	DX	N	C
0CW2269K001//	572 505 0015	47- 22	AH	DX	N	C
0CW2269K008//	572 505 0016	47- 31	AK	EB	N	C
0CW2269K011//	572 505 0017	42- 32	AH	DX	N	C
0CW2269K012//	572 505 0018	46- 10	AG	DX	N	C
0CW2269K013//	572 505 0019	42- 8	AU	EZ	N	C
0CW2269K016//	572 505 0020	44- 33	AF	DS	N	C
0CW2269K025F/	572 246 0439	47- 29	BD	GJ	N	C
0CW2269K026G/	572 246 0440	47- 17	BD	GN	N	C
0CW2269K032//	572 685 2170	39- 12	CB	TZ	N	E
0CW2269K042B/	572 400 0819	41- 37	AF	DX	N	C
0CW2269K047//	572 110 1283	41- 9	AR	EQ	N	B
0CW2269K061//	572 290 2879	40- 31	AL	EB	N	C
0CW2269K062B/	572 345 3982	40- 45	AU	EZ	N	E
0CW2269K064//	572 226 0685	39-501	BG	GT	N	D
0CW2269K066//	572 685 2171	39- 28	BY	TF	N	D
0CW2269K094C/	572 214 2348	41- 3	AZ	FX	N	B
0CW2269K202//	572 684 3985	47- 3	BZ	TF	N	E
0CW2269K207//	572 521 0236	39- 25	AH	DX	N	E
0CW2269K221//	572 542 2223	48- 3	AM	EG	N	C
0CW2269K222B/	572 542 2315	48- 9	AG	DX	N	C
0CW2269K223B/	572 542 2316	48- 2	AL	EB	N	C
0CW2269K224//	572 542 2226	48- 11	AL	EB	N	C
0CW2269K225B/	572 542 2317	48- 1	AP	EQ	N	C
0CW2269K230//	572 542 2228	48- 6	AK	EB	N	C
0CW2269K231//	572 542 2229	48- 10	AK	DX	N	C
0CW2269K232//	572 542 2230	39- 15	AY	FQ	N	B
0CW2269K234B/	572 542 2318	48- 7	AY	FQ	N	C
0CW2269K240//	572 573 2818	47- 4	AX	FG	N	B
0CW2269K241B/	572 630 1132	42- 12	BL	HL	N	B
0CW2269K242B/	572 630 1133	46- 4	BM	HV	N	B
0CW2269K243//		48- 8	BL	HL	N	C
0CW2269P001//	572 210 1216	47- 2	BP	LP	N	D
0CW2269P002//	572 110 1284	39- 23	AX	FQ	N	C
0CW2269P003//	572 110 1285	39- 16	BA	FX	N	C
0CW2269P004//	572 226 0686	39- 4	BB	GD	N	C
0CW2269P005//	572 345 3873	44- 12	AP	EQ	N	C
0CW2269P006//	572 110 1286	44- 8	AW	FG	N	C
0CW2269P007//	572 110 1287	40- 13	AZ	FQ	N	D
0CW2269P009//	572 110 1288	39- 18	AP	EQ	N	C
0CW2269P010//	572 345 3874	41- 1	AS	EQ	N	C
0CW2269P011//	572 345 3875	41- 2	AQ	EQ	N	C
0CW2269P012A/	572 345 3930	41- 55	AM	EG	N	C

PARTS CODE	JAPAN ONLY ORDER CODE	NO.	PRICE R. Ex.	PRICE R. Ja.	NEW	P/R
0CW2269P013//	572 345 3931	43- 52	AQ	EQ	N	C
0CW2269P014C/	572 345 3983	43- 26	AW	FG	N	C
0CW2269P015//	572 110 1289	43- 23	AG	DS	N	C
0CW2269P016//	572 248 1449	43- 34	AD	DJ	N	C
0CW2269P017//	572 248 1450	43- 10	AE	DJ	N	C
0CW2269P018//	572 110 1290	44- 26	AQ	EQ	N	C
0CW2269P020//	572 284 0867	47- 36	AD	DJ	N	C
0CW2269P022//	572 214 2316	45- 24	AF	DS	N	C
0CW2269P025//	572 214 2317	45- 5	AG	DS	N	C
0CW2269P026//	572 214 2318	45- 23	AF	DS	N	C
0CW2269P029//	572 214 2319	45- 4	AG	DS	N	C
0CW2269P038//	572 214 2320	41- 46	AE	DS	N	C
0CW2269P052//	572 230 0534	40- 18	AD	DJ	N	C
0CW2269P053//	572 248 1451	40- 49	AE	DS	N	C
0CW2269P054D/	572 221 8356	40- 6	AE	DS	N	C
0CW2269P055//	572 248 1452	42- 1	AE	DS	N	C
0CW2269P056//	572 273 0028	42- 30	AD	DJ	N	C
0CW2269P057//	572 284 0868	42- 23	AE	DS	N	C
0CW2269P059//	572 248 1453	43- 39	AE	DJ	N	C
0CW2269P060//	572 248 1454	44- 21	AE	DJ	N	C
0CW2269P061E/	572 240 0489	40- 30	AG	DX	N	C
0CW2269P062//	572 240 0467	40- 36	AN	EG	N	C
0CW2269P065//	572 110 1291	41- 4	AE	DS	N	C
0CW2269P066//	572 214 2321	41- 7	AF	DS	N	C
0CW2269P068//	572 345 3877	39- 1	AK	DX	N	C
0CW2269P069//	572 345 3878	39- 6	AK	DX	N	C
0CW2269P071D/	572 110 1308	40- 50	AH	DX	N	C
0CW2269P077//	572 248 1455	39- 7	AL	EB	N	C
0CW2269P099A/	572 284 0875	45- 9	AD	DJ	N	C
0CW2269P104//	572 203 1134	44- 18	AF	DS	N	C
0CW2269P105//	572 427 1661	43- 21	AH	DX	N	C
0CW2269P106//	572 427 1662	43- 22	AF	DS	N	C
0CW2269P107//	572 203 1135	43- 33	AK	DX	N	C
0CW2269P108//	572 203 1136	47- 15	AH	DX	N	C
0CW2269P109//	572 345 3879	41- 33	AT	EZ	N	C
0CW2269P110//	572 203 1137	44- 24	AP	EQ	N	C
0CW2269P111//	572 203 1138	44- 2	AN	EG	N	C
0CW2269P112//	572 203 1139	44- 20	AF	DS	N	C
0CW2269P114//	572 203 1140	46- 8	AQ	EQ	N	C
0CW2269P115//	572 203 1141	41- 30	AL	EB	N	C
0CW2269P116//	572 203 1142	47- 25	AH	DX	N	C
0CW2269P119//	572 221 8106	45- 12	AQ	EQ	N	C
0CW2269P120//	572 221 8107	45- 11	AP	EQ	N	C
0CW2269P123//	572 203 1143	45- 20	AH	DX	N	C
0CW2269P128//	572 258 4086	44- 14	AE	DS	N	C
0CW2269P132//	572 203 1144	40- 12	AE	DS	N	C
0CW2269P133//	572 203 1145	40- 1	AG	DX	N	C
0CW2269P139//	572 203 1146	40- 8	AE	DS	N	C
0CW2269P142//	572 203 1147	43- 44	AF	DS	N	C
0CW2269P145//	572 231 0585	47- 40	AW	FG	N	C
0CW2269P146//	572 231 0586	47- 14	AN	EG	N	C
0CW2269P147//	572 248 1456	47- 18	AF	DS	N	C
0CW2269P149//	572 203 1148	41- 31	AE	DJ	N	C
0CW2269P159//	572 203 1149	47- 10	AF	DS	N	C
0CW2269P160A/	572 505 0021	44- 4	AG	DX	N	C
0CW2269P171//	572 258 4087	42- 13	AL	EB	N	C
0CW2269P172//	572 258 4088	47- 11	AK	DX	N	C
0CW2269P176//	572 258 4090	45- 33	AE	DS	N	C
0CW2269P206//	572 290 2880	40- 29	AQ	EQ	N	C
0CW2269P207//	572 290 2881	43- 35	AF	DS	N	C
0CW2269P211//	572 290 2882	44- 28	AG	DX	N	C
0CW2269P221//	572 290 2883	47- 34	AH	DX	N	C
0CW2269P300//	572 287 2345	40- 23	AN	EQ	N	B
0CW2269P301//	572 287 2346	40- 14	AV	FG	N	B
0CW2269P303//	572 277 0119	44- 17	AY	FQ	N	C
0CW2269P304//	572 403 5197	43- 24	AD	DJ	N	C
0CW2269P305//	572 310 0360	44- 7	AQ	EQ	N	C
0CW2269P306//	572 310 0361	43- 2	AQ	EQ	N	C
0CW2269P307//	572 403 5198	44- 32	AN	EQ	N	C
0CW2269P308//	572 258 4092	43- 41	AD	DJ	N	C
0CW2269P309//	572 258 4093	44- 27	AC	DJ	N	C
0CW2269P311//	572 326 0498	41- 11	AG	DX	N	B
0CW2269P315//	572 258 4094	41- 41	AD	DJ	N	C
0CW2269P316//	572 316 0418	40- 28	AH	DX	N	C
0CW2269P318//	572 316 0419	40- 42	AH	DX	N	C
0CW2269P320//	572 326 0499	41- 10	AE	DS	N	B
0CW2269P324//	572 400 0806	41- 25	AE	DS	N	C
0CW2269P326//	572 287 2347	45- 27	AZ	FQ	N	C
0CW2269P327//	572 287 2348	45- 1	BA	FX	N	C
0CW2269P331//	572 310 0362	41- 39	AT	EZ	N	C
0CW2269P332//	572 310 0363	41- 35	AR	EQ	N	C

PARTS CODE	JAPAN ONLY ORDER CODE	NO.	PRICE R. Ex.	PRICE R. Ja.	NEW	P/R
0CW2269P333//	572 287 2349	43- 19	BB	GD	N	B
0CW2269P334//	572 287 2350	41- 26	AY	FQ	N	B
0CW2269P335//	572 403 5199	44- 13	AD	DJ	N	C
0CW2269P336//	572 403 5200	43- 4	AG	DX	N	C
0CW2269P337//	572 403 5201	44- 31	AE	DJ	N	C
0CW2269P338//	572 403 5202	44- 11	AD	DJ	N	C
0CW2269P339//	572 326 0500	43- 47	AD	DJ	N	C
0CW2269P340//	572 403 5203	43- 28	AF	DS	N	C
0CW2269P341B/	572 403 5277	40- 21	AF	DS	N	C
0CW2269P343//	572 287 2351	45- 7	AZ	FQ	N	C
0CW2269P344D/	572 403 5316	40- 48	AG	DS	N	C
0CW2269P349B/	572 258 4191	41- 5	AD	DJ	N	C
0CW2269P350//	572 326 0501	40- 7	AD	DJ	N	C
0CW2269P351//	572 326 0502	44- 30	AC	DJ	N	C
0CW2269P354//	572 326 0503	43- 1	AL	EB	N	C
0CW2269P355A/	572 326 0516	40- 52	AH	DX	N	C
0CW2269P356A/	572 326 0517	40- 53	AF	DS	N	C
0CW2269P357//	572 287 2352	44- 29	AG	DX	N	C
0CW2269P358//	572 403 5206	43- 30	AD	DJ	N	C
0CW2269P359//	572 403 5207	43- 29	AN	EG	N	C
0CW2269P361//	572 399 0253	40- 15	AD	DJ	N	C
0CW2269P362//	572 326 0504	40- 5	AD	DJ	N	C
0CW2269P363//	572 258 4096	46- 5	AD	DJ	N	C
0CW2269P364//	572 326 0505	40- 10	AF	DS	N	C
0CW2269P365//	572 326 0506	39- 20	AV	FG	N	C
0CW2269P366//	572 326 0507	39- 21	AS	EQ	N	C
0CW2269P368//	572 326 0508	40- 4	AF	DS	N	C
〃	572 326 0508	44- 10	AF	DS	N	C
0CW2269P369//	572 326 0509	44- 9	AE	DS	N	C
0CW2269P381//	572 917 3675	39- 24	AL	EB	N	C
0CW2269P382//	572 326 0510	45- 26	AD	DJ	N	C
0CW2269P389//	572 326 0511	43- 50	AD	DJ	N	C
0CW2269P393A1	572 373 0146	47- 38	AG	DX	N	C
0CW2269P399A/	572 403 5266	44- 37	AE	DS	N	C
0CW2269P440//	572 647 0402	43- 51	AT	EZ	N	C
0CW2269P451A/	572 403 5267	41- 52	AF	DS	N	C
0CW2269P453A/	572 403 5268	41- 53	AE	DJ	N	C
0CW2269P455A/	572 403 5269	41- 54	AQ	EQ	N	C
0CW2269P459//	572 403 5317	40- 60	AG	DS	N	C
0CW2269P460//	572 403 5318	40- 61	AE	DS	N	C
0CW3085P334A/	572 970 2552	43- 20	AC	DJ	N	C
〃	572 970 2552	44- 34	AC	DJ	N	C
0CW4048P300A/	572 970 2553	44- 1	AC	DJ	N	C
0CW4054P143B1	572 970 2577	47- 16	AB	DJ	N	C
0CW4054P220D/	572 970 1731	39- 26	AB	DJ		C
〃	572 970 1731	46- 9	AB	DJ		C
0CW4062Q304B/	572 970 2555	43- 11	AC	DJ	N	C
0CW660580////	572 980 0091	39- 9	AA	DD		C
0CWE120001648	572 530 0715	42- 14	AP	EQ	N	B
〃	572 530 0715	47- 12	AP	EQ	N	B
0CWE314000619	572 568 0058	39- 8	AH	DX		B
〃	572 568 0058	41- 32	AH	DX		B
〃	572 568 0058	42- 2	AH	DX		B
〃	572 568 0058	43- 9	AH	DX		B
0CWE450000070	572 201 0104	47- 6	AB	DJ		C
0CWE450001128	572 201 0169	43- 8	AC	DJ		C
0CWE450001139	572 399 0252	43- 6	AC	DJ	N	C
〃	572 399 0252	47- 7	AC	DJ	N	C
0CWER040SKP//	572 399 0086	40- 33	AB	DD		C
〃	572 399 0086	44- 22	AB	DD		C
0CWER050SKP//	572 399 0089	40- 20	AA	DD		C
〃	572 399 0089	41- 17	AA	DD		C
〃	572 399 0089	42- 20	AA	DD		C
〃	572 399 0089	43- 18	AA	DD		C
〃	572 399 0089	46- 13	AA	DD		C
〃	572 399 0089	47- 32	AA	DD		C
0CWER070SKP//	572 399 0101	41- 20	AA	DD		C
〃	572 399 0101	42- 19	AA	DD		C
〃	572 399 0101	43- 38	AA	DD		C
〃	572 399 0101	45- 10	AA	DD		C
0CWHP02010SCH	572 218 0634	40- 26	AC	DJ	N	C
〃	572 218 0634	42- 26	AC	DJ	N	C
0CWNSBLT00056	572 271 0623	40- 24	AN	EG		C
0CWNSBLT00277	572 271 0834	42- 22	AP	EQ	N	C
0CWNSBLT00278	572 271 0862	44- 36	AL	EB	N	C
0CWNSBLT00281	572 271 0863	47- 41	AQ	EQ	N	C
0CWNSBLT00282	572 271 0864	47- 35	AR	EQ	N	C
0CWNSBRG00016	572 272 0626	42- 9	AT	EZ		C
〃	572 272 0626	47- 33	AT	EZ		C
0CWNSBRG00019	572 272 0806	41- 18	AQ	EQ	N	C
〃	572 272 0806	43- 15	AQ	EQ	N	C

PARTS CODE	JAPAN ONLY ORDER CODE	NO.	PRICE R. Ex.	PRICE R. Ja.	NEW	P/R
0CWNSBRG00019	572 272 0806	45- 8	AQ	EQ	N	C
0CWPW080025//	572 256 0185	41- 40	AB	DJ	N	C
0FT23040224//	572 200 1334	57- 1	AD	DJ		C
0FT23042251//	572 397 0182	57- 2	AP	EQ		C
0FT23075095//	572 512 0394	57- 3	AP	EQ		C
0FT23095657//	572 576 0569	57- 96	AF	DS		B
〃	572 576 0569	57- 97	AF	DS		B
〃	572 576 0569	57- 98	AF	DS		B
〃	572 576 0569	57- 99	AF	DS		B
0FT23124819//	572 594 0890	57-100	AK	DX		C
0FT23124827//	572 594 0891	57-101	AF	DS		C
0FT23194310//	572 575 0159	57- 4	AU	EZ		B
0FT23204782//	572 594 0893	57-102	AP	EQ		C
0FT23204790//	572 594 0894	57-103	AP	EQ		C
〃	572 594 0894	57-104	AP	EQ		C
0FT23241823//	572 590 0053	57-105	AP	EQ		B
0FT23259382//	572 594 0895	57-106	AP	EQ		C
0FT23259420//	572 594 0896	57-107	AP	EQ		C
0FT23259447//	572 594 0897	57-108	AK	DX		C
0FT23259498//	572 594 0898	57-109	AK	DX		C
〃	572 594 0898	57-110	AK	DX		C
〃	572 594 0898	57-111	AK	DX		C
0FT23287629//	572 576 0570	57-112	AK	DX		B
0FT23287637//	572 576 0571	57-113	AP	EQ		B
0FT23287696//	572 576 0580	57-114	AP	EQ		B
0FT23287823//	572 594 0900	57-115	AK	DX		C
0FT23314081//	572 573 2389	57- 5	AU	EZ		B
0FT23319431//	572 570 0525	57-116	AF	DS		B
〃	572 570 0525	57-117	AF	DS		B
0FT23326101//	572 594 0901	57-118	AU	EZ		C
0FT23329089//	572 594 0902	57-119	AK	DX		C
〃	572 594 0902	57-120	AK	DX		C
0FT23379450//	572 573 2390	57-121	AU	EZ		B
〃	572 573 2390	57-122	AU	EZ		B
0FT23394395//	572 594 0903	57-123	AU	EZ		C
0FT23414892//	572 581 1976	57-124	AF	DS		C
0FT23415341//	572 581 1979	57-125	AF	DS		C
0FT23415430//	572 581 1982	57-126	AF	DS		C
0FT23415570//	572 581 1984	57-127	AF	DS		C
〃	572 581 1984	57-128	AF	DS		C
〃	572 581 1984	57-129	AF	DS		C
0FT23415600//	572 581 1985	57-130	AF	DS		C
0FT23415643//	572 581 1988	57-131	AF	DS		C
0FT23415651//	572 581 1989	57-132	AF	DS		C
0FT23415716//	572 581 1992	57-133	AF	DS		C
0FT23415740//	572 581 1994	57-134	AF	DS		C
0FT23415899//	572 581 1996	57-135	AF	DS		C
0FT23423816//	572 990 0439	57- 7	AC	DJ		C
0FT23429199//	572 570 0526	57-136	AK	DX		B
0FT23432963//	572 990 0440	57- 8	AC	DJ		C
0FT23462226//	572 581 1999	57- 33	AD	DJ		C
〃	572 581 1999	57- 34	AD	DJ		C
0FT23462234//	572 581 2001	57- 35	AD	DJ		C
〃	572 581 2001	57- 36	AD	DJ		C
〃	572 581 2001	57- 37	AD	DJ		C
〃	572 581 2001	57- 38	AD	DJ		C
0FT23462250//	572 581 2002	57- 39	AD	DJ		C
〃	572 581 2002	57- 40	AD	DJ		C
〃	572 581 2002	57- 41	AD	DJ		C
〃	572 581 2002	57- 42	AD	DJ		C
〃	572 581 2002	57- 43	AD	DJ		C
0FT23462269//	572 581 2003	57- 44	AD	DJ		C
〃	572 581 2003	57- 45	AD	DJ		C
〃	572 581 2003	57- 46	AD	DJ		C
0FT23462293//	572 581 2004	57- 47	AD	DJ		C
0FT23463362//	572 581 2005	57- 48	AD	DJ		C
0FT23484661//	572 581 2060	57-137	AD	DJ		C
0FT23485706//	572 512 0396	57- 9	AK	DX		C
0FT23486796//	572 594 0904	57-138	AK	DX		C
0FT23486850//	572 594 0905	57-139	AK	DX		C
〃	572 594 0905	57-140	AK	DX		C
0FT23536106//	572 581 2006	57- 49	AD	DJ		C
〃	572 581 2006	57- 50	AD	DJ		C
〃	572 581 2006	57- 51	AD	DJ		C
0FT23538850//	572 581 2009	57- 52	AD	DJ		C
〃	572 581 2009	57- 53	AD	DJ		C
0FT23538885//	572 581 2010	57- 54	AD	DJ		C
0FT23538915//	572 581 2011	57- 55	AD	DJ		C
0FT23538923//	572 581 2012	57- 56	AD	DJ		C
0FT23538974//	572 581 2013	57- 57	AD	DJ		C
0FT23538982//	572 581 2014	57- 58	AD	DJ		C

PARTS CODE	JAPAN ONLY ORDER CODE	NO.	PRICE R. Ex.	PRICE R. Ja.	NEW	P/R
0FT23541509//	572 571 0254	57- 59	AK	DX		B
0FT23543641//	572 516 0055	57-141	AK	DX		C
0FT23546047//	572 581 2015	57- 60	AD	DJ		C
〃	572 581 2015	57- 61	AD	DJ		C
0FT23549119//	572 593 0340	57- 62	AF	DS		C
〃	572 593 0340	57- 63	AF	DS		C
〃	572 593 0340	57- 64	AF	DS		C
〃	572 593 0340	57- 65	AF	DS		C
〃	572 593 0340	57- 66	AF	DS		C
〃	572 593 0340	57- 67	AF	DS		C
〃	572 593 0340	57- 68	AF	DS		C
0FT23551148//	572 571 0255	57- 69	AK	DX		B
0FT23551377//	572 570 0527	57- 70	AK	DX		B
0FT23557111//	572 581 2016	57- 71	AD	DJ		C
0FT23559467//	572 576 0572	57- 10	AR	EQ		B
0FT23562328//	572 580 0996	57- 11	AD	DJ		C
0FT23562379//	572 580 1233	57- 12	AD	DJ		C
〃	572 580 1233	57- 13	AD	DJ		C
0FT23562549//	572 581 2017	57- 14	AD	DJ		C
0FT23562700//	572 581 2018	57- 15	AD	DJ		C
〃	572 581 2018	57- 16	AD	DJ		C
0FT23562727//	572 581 2019	57- 17	AD	DJ		C
0FT23562816//	572 580 1235	57- 18	AC	DJ		C
〃	572 580 1235	57- 19	AC	DJ		C
0FT23562859//	572 580 1236	57- 20	AD	DJ		C
0FT23563103//	572 581 2021	57- 21	AD	DJ		C
〃	572 581 2021	57- 22	AD	DJ		C
0FT23563324//	572 580 1020	57- 23	AC	DJ		C
〃	572 580 1020	57- 24	AC	DJ		C
0FT23565505//	572 581 2025	57- 72	AD	DJ		C
0FT23578194//	572 581 2026	57- 73	AD	DJ		C
〃	572 581 2026	57- 74	AD	DJ		C
0FT23581330//	572 593 0341	57- 75	AD	DJ		C
〃	572 593 0341	57- 76	AD	DJ		C
〃	572 593 0341	57- 77	AD	DJ		C
0FT23583309//	572 571 0256	57- 78	AG	DX		B
0FT23598470//	572 571 0257	57- 79	AG	DX		B
0FT23598977//	572 512 0397	57- 25	AK	DX		C
0FT23605507//	572 570 0528	57-142	AK	DX		B
〃	572 570 0528	57-143	AK	DX		B
〃	572 570 0528	57-144	AK	DX		B
〃	572 570 0528	57-145	AK	DX		B
0FT23610810//	572 570 0529	57-146	AK	DX		B
〃	572 570 0529	57-147	AK	DX		B
〃	572 570 0529	57-148	AK	DX		B
〃	572 570 0529	57-149	AK	DX		B
〃	572 570 0529	57-150	AK	DX		B
〃	572 570 0529	57-151	AK	DX		B
〃	572 570 0529	57-152	AK	DX		B
〃	572 570 0529	57-153	AK	DX		B
0FT23611329//	572 594 0643	57- 26	AK	DX		C
0FT23624285//	572 570 0540	57-154	AK	DX		B
0FT23624293//	572 581 2027	57- 80	AD	DJ		C
0FT23625591//	572 581 2028	57- 81	AD	DJ		C
〃	572 581 2028	57- 82	AD	DJ		C
0FT23642925//	572 614 0183	57- 27	AK	DX		B
0FT23644634//	572 670 0175	57- 28	AK	DX		B
0FT23663914//	572 581 2029	57- 83	AD	DJ		C
0FT23665429//	572 573 2391	57- 29	AU	EZ		B
0FT23671666//	572 573 2392	57- 30	AU	EZ		B
0FT23690482//	572 580 1255	57-155	AD	DJ		C
0FT23697355//	572 403 4281	57- 31	AU	EZ		B
0FT23736903//	572 570 0530	57- 32	AX	FG		B
0FT23752267//	572 580 1259	57-156	AD	DJ		C
〃	572 580 1259	57-157	AD	DJ		C
0FT33005385//	572 581 2035	57-158	AD	DJ		C
0FT33008015//	572 570 0531	57-168	AW	FG		B
0FT33035349//	572 570 0399	57-169	AK	DX		B
0FT33036442//	572 580 1262	57-159	AD	DJ		C
0FT33055277//	572 532 0211	57-160	AK	DX		C
0FT33085427//	572 576 0574	57-170	AU	EZ		B
0FT33122675//	572 570 0532	57- 84	AF	DS		B
〃	572 570 0532	57- 85	AF	DS		B
〃	572 570 0532	57- 86	AF	DS		B
〃	572 570 0532	57- 87	AF	DS		B
〃	572 570 0532	57- 88	AF	DS		B
〃	572 570 0532	57- 89	AF	DS		B
〃	572 570 0532	57- 90	AF	DS		B
〃	572 570 0532	57- 91	AF	DS		B
〃	572 570 0532	57- 92	AF	DS		B
〃	572 570 0532	57- 93	AF	DS		B

PARTS CODE	JAPAN ONLY ORDER CODE	NO.	PRICE R. Ex.	PRICE R. Ja.	NEW	P/R
0FT33122675//	572 570 0532	57- 94	AF	DS		B
0FT33146922//	572 515 0507	57-171	AK	DX		A
0FT33173377//	572 614 0282	57-172	BA	FX		B
0FT33186711//	572 576 0575	57-161	AR	EQ		B
0FT33189184//	572 594 0911	57- 95	AD	DJ		C
0FT33197209//	572 574 0323	57-173	BA	FX		B
0FT33199031//	572 576 0576	57-174	AW	FG		B
0FT33213581//	572 397 0183	57-175	AP	EQ		C
0FT33213786//	572 593 0346	57-162	AK	DX		C
〃	572 593 0346	57-163	AK	DX		C
0FT33262132//	572 568 0129	57-176	AP	EQ		B
〃	572 568 0129	57-177	AP	EQ		B
0FT33293976//	572 594 0784	57-178	AF	DS		C
0FT33295049//	572 593 0347	57-164	AK	DX		C
0FT33331673//	572 573 2393	57-179	AZ	FQ		B
0FT33388799//	572 593 0348	57-165	AP	EQ		C
0FT33441622//	572 596 0393	57-180	AL	EB		C
0FT33441630//	572 593 0351	57-181	AP	EQ		C
0FT33478232//	572 594 0912	57-182	AZ	FQ		C
0FT33509685//	572 512 0400	57-183	AP	EQ		C
0FT33529090//	572 532 0212	57-184	AP	EQ		C
〃	572 532 0212	57-185	AP	EQ		C
〃	572 532 0212	57-186	AP	EQ		C
〃	572 532 0212	57-187	AP	EQ		C
0FT33552203//	572 581 2037	57-166	AD	DJ		C
0FT33568266//	572 637 0158	57-188	BA	FX		B
0FT33570120//	572 581 2038	57-167	AD	DJ		C
0FT33570163//	572 581 2039	57-189	AF	DS		C
〃	572 581 2039	57-190	AF	DS		C
0FT33603762//	572 573 2394	57-191	BB	GD		B
0FT33603789//	572 660 0436	57-192	BF	GN		B
0FT33638361//	572 637 0159	57-193	BC	GJ		B
〃	572 637 0159	57-194	BC	GJ		B
0FT35863281//	572 660 0437	57-195	BF	GN		B

注 意

・電池を正しく交換しないと爆発を起こす危険がある。

・機器製造者が指定したものと同一型名のもの、又は、
その同等の電池とのみ交換すること。

・使用済みの電池は、製造者の指示に従って処分すること。

CAUTION FOR BATTERY REPLACEMENT

(Danish) ADVARSEL !
Lithiumbatteri - Eksplosionsfare ved fejlagtig håndtering.
Udskiftning må kun ske med batteri
af samme fabrikat og type.
Levér det brugte batteri tilbage til leverandoren.

(English) Caution !
Danger of explosion if battery is incorrectly replaced.
Replace only with the same or equivalent type
recommended by the manufacturer.
Dispose of used batteries according to manufacturer's instructions.

(Finnish) VAROITUS
Paristo voi räjähtää,jos se on virheellisesti asennettu.
Vaihda paristo ainoastaan laitevalmistajan suosittelemaan
tyyppiin. Hävitä käytetty paristo valmistajan ohjeiden
mukaisesti.

(French) ATTENTION
Il y a danger d'explosion s'il y a remplacement incorrect
de la batterie. Remplacer uniquement avec une batterie du
même type on d'un type équivalent recommandé par
le constructeur.
Mettre au rébut les batteries usagées conformément aux
instructions du fabricant.

(Swedish) VARNING
Explosionsfara vid felaktigt batteribyte.
Använd samma batterityp eller en ekvivalent
typ som rekornmenderas av apparattillverkaren.
Kassera använt batteri enligt fabrikantens
Instruktion.

(German) Achtung
Explosionsgefahr bei Verwendung inkorrekter Batterien.
Als Ersatzbatterien dürfen nur Batterien vom gleichen Typ oder
vom Hersteller empfohlene Batterien verwendet werden.
Entsorgung der gebrauchten Batterien nur nach den vom
Hersteller angegebenen Anwerisugen.

CAUTION FOR BATTERY DISPOSAL

(For USA,CANADA)
Contains lithium-ion battery. Must be disposed of properly.
Remove the battery from the product and contact
federal or state environmental
agencies for information on recycling and disposal options.

SHARP

COPYRIGHT © 2003 BY SHARP CORPORATION

All rights reserved.
Printed in Japan.
No part of this publication may be reproduced,
stored in a retrieval system, or transmitted.
In any form or by any means,
electronic, mechanical, photocopying, recording, or otherwise,
without prior written permission of the publisher.

SHARP CORPORATION
Digital Document Systems Group
Products Quality Assurance Department
Yamatokoriyama, Nara 639-1186, Japan
2003 March Printed in Japan ⓣ